Strata

XII & XX

GENERAL DESCRIPTION

Strata XII & XX

GENERAL DESCRIPTION

TABLE OF CONTENTS

PARAGRAPH	SUBJECT	PAGE
	TABLE OF CONTENTS	i
01	GENERAL	1
01.00	Summary Description	1
02	PHYSICAL DESCRIPTIONS	1
02.00	Key Service Units	1
02.10	Electronic Key Telephones	1
02.20	Direct Station Selection Console	6
03	ELECTRICAL CHARACTERISTICS	8
	TABLE A (Electrical Characteristics)	8
04	FEATURES and SERVICES	8
	TABLE B (Standard Features)	9
	TABLE C (Optional Features)	9
05	SYSTEM OPERATION	9
06	SYSTEM CONFIGURATION	11
06.00	Key Service Unit (MKSU)	11
06.10	Power Supply Assembly	14
06.20	Station Equipment	14
06.30	Installation	15
06.40	Maintenance	15
07	FEATURES and OPERATION	15
07.00	General	15
07.10	Standard Features	15
07.20	Optional Features	18

ILLUSTRATION LIST

FIGURE NO.	TITLE	PAGE
1	STRATA XII MKSU (Dimensions)	2
2	STRATA XX MKSU (Dimensions)	3
3	STRATA XII MKSU (Interior)	4
4	STRATA XX MKSU (Interior)	5
5	STANDARD 20-key EKT	6
6	OPTIONAL 10-key EKT	7
7	DIRECT STATION SELECTION (DSS) CONSOLE	7
8	SYSTEM DIAGRAM	10
9	STRATA XII FUNCTIONAL BLOCK DIAGRAM	12
10	STRATA XX FUNCTIONAL BLOCK DIAGRAM	13

01 GENERAL

01.00 Summary Description

01.01 The STRATA XII and STRATA XX are electronic key telephone systems with many standard features; utilizing stored program control, custom LSI circuitry, solid-state space division switching and reduced station cabling. Both STRATA systems are very similar and use the same printed circuit boards for station lines, CO lines and control. The difference is in the capacity of the two key service units (MKSUs). STRATA XII has a maximum of 12 CO lines and 32 stations; while STRATA XX will accommodate up to 21 CO lines with a maximum of 56 stations. Both KSUs are housed in single cabinets.

01.02 The STRATA systems include a specially designed electronic key telephone (EKT), incorporating, among other standard features, handsfree answering and full speakerphone capability. Each EKT is connected to the system via industry-standard 2-pair cabling, and is equipped with a push-button dial pad. Solid-state electronics within the MKSU translate signals from the station dial pad into either DTMF or rotary dial signals, as required by the central office.

01.03 Both systems are electrically compatible with the public telephone network and are also designed to function in a "behind PBX" environment.

01.04 Maintenance procedures are based on quickly locating and replacing defective plug-in units, keeping service disruption to a minimum.

02 PHYSICAL DESCRIPTIONS

02.00 Key Service Units

02.01 Each of the STRATA MKSUs consist of a single metal cabinet (Figures 1 and 2) with the following dimensions:

STRATA XII
Height: 19.0 inches (483 mm)
Width: 15.5 inches (394 mm)
Depth: 12.0 inches (305 mm)

STRATA XX
Height: 26.3 inches (668 mm)
Width: 16.8 inches (427 mm)
Depth: 12.0 inches (305 mm)

Both cabinets are configured at the factory for table-top mounting but can be wall-mounted with an optional wall mount bracket.

02.02 The STRATA XII MKSU (Figure 3) contains two shelves with spaces to accommodate up to 18 printed circuit boards (PCBs).

02.03 The STRATA XX MKSU (Figure 4) contains three shelves with spaces to accommodate up to 32 PCBs.

NOTE:
Several STRATA PCBs utilize plug-in subassemblies which are mounted directly on the host PCB. These subassemblies may or may not be required for a particular system — see System Configuration for complete details.

02.04 Each PCB measures 8.7 x 7.1 ins. (220 x 180 mm) and is equipped with either an 80- or a 100-pin edge connector. All external MKSU connections are made on the front panels of the various PCBs by using cables with industry-standard connectors.

02.10 Electronic Key Telephones

02.11 Three different Electronic Key Telephones (EKTs) and a Direct Station Selection (DSS) console may be used in either STRATA system. All three EKTs are equipped with four permanently dedicated keys and either 10 or 20 feature keys. Because of the number of these feature keys these EKTs are known as a 20-key EKT, a 10-key EKT and a 10-key Busy Lamp Field (BLF) EKT.

02.12 The 20-key EKT, Figure 5, measures:

Height: 4.0 inches (102 mm)
Width: 8.8 inches (224 mm)
Depth: 9.1 inches (230 mm)

and is equipped with 24 line and feature keys in addition to its push-button dial pad. In initialized mode, seventeen of the keys are utilized for central office/PBX lines, one for intercom access, and the remaining six keys are used for feature operation. System software assignments permit some assignment variations to the CO/PBX keys to facilitate tenant service and private lines, and to allow unused keys to be used for automatic dialing.

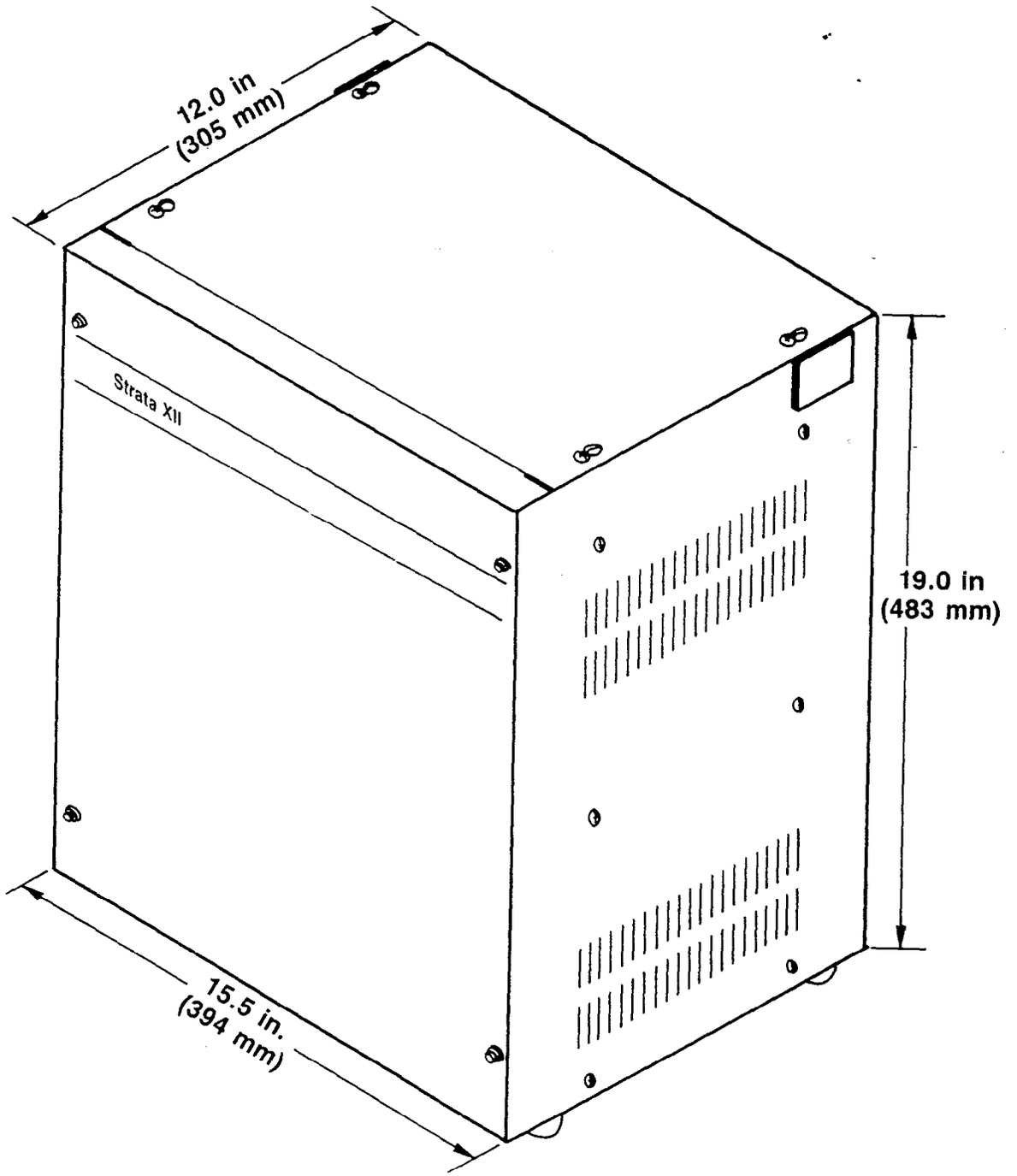

FIGURE 1—STRATA XII MKSU (Dimensions)

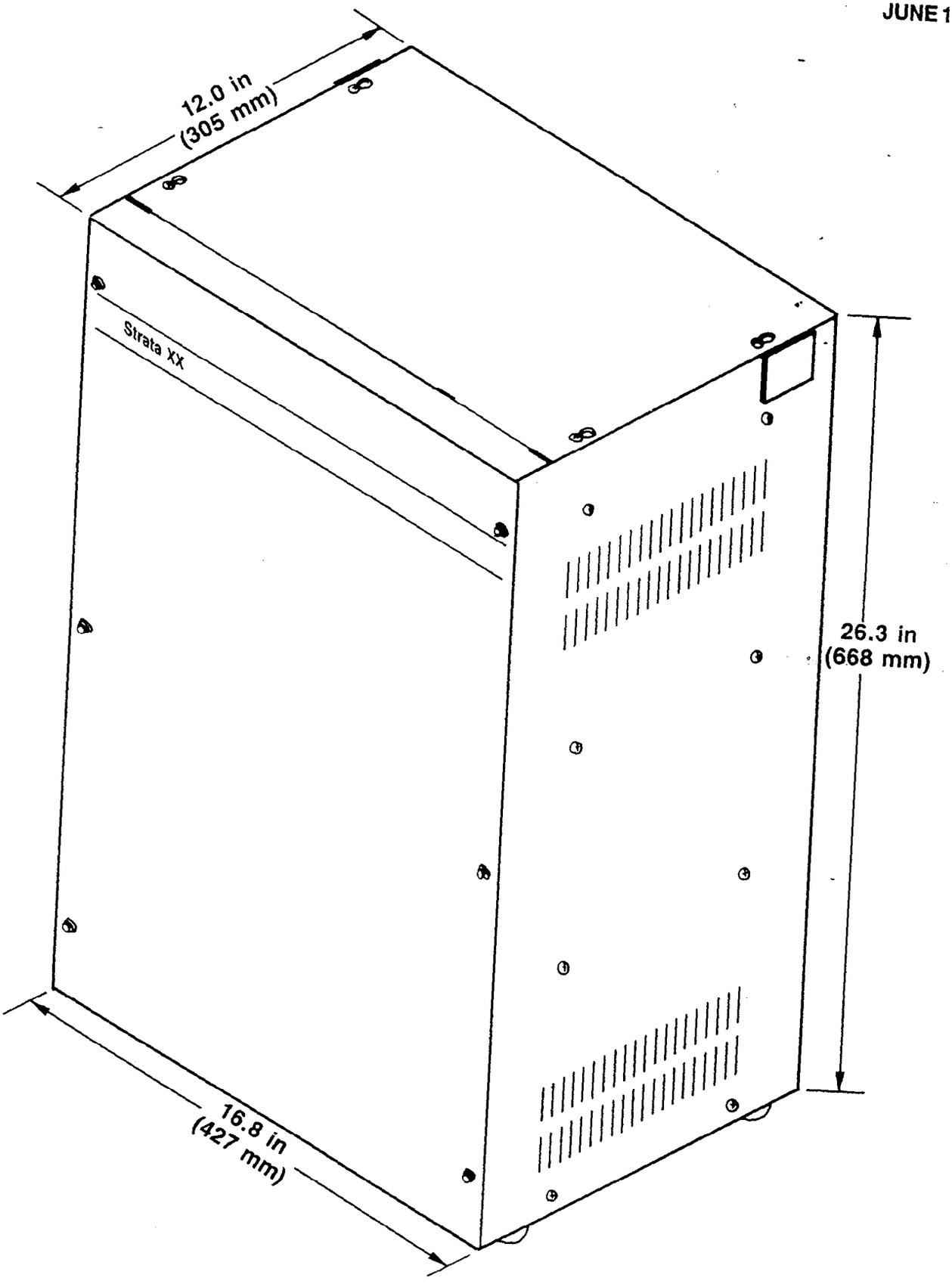

FIGURE 2—STRATA XX MKSU (Dimensions)

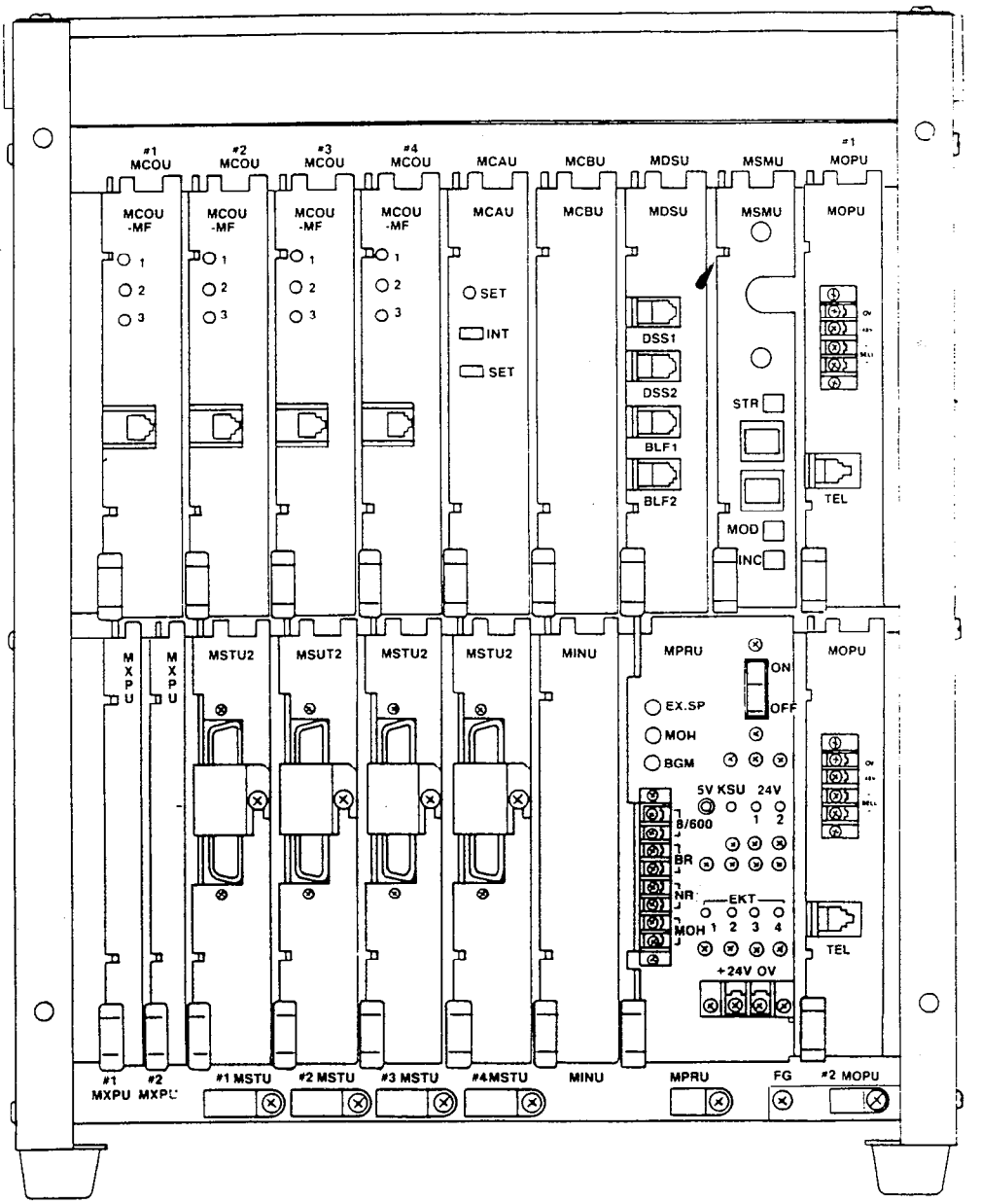

FIGURE 3—STRATA XII MKSU (Interior)

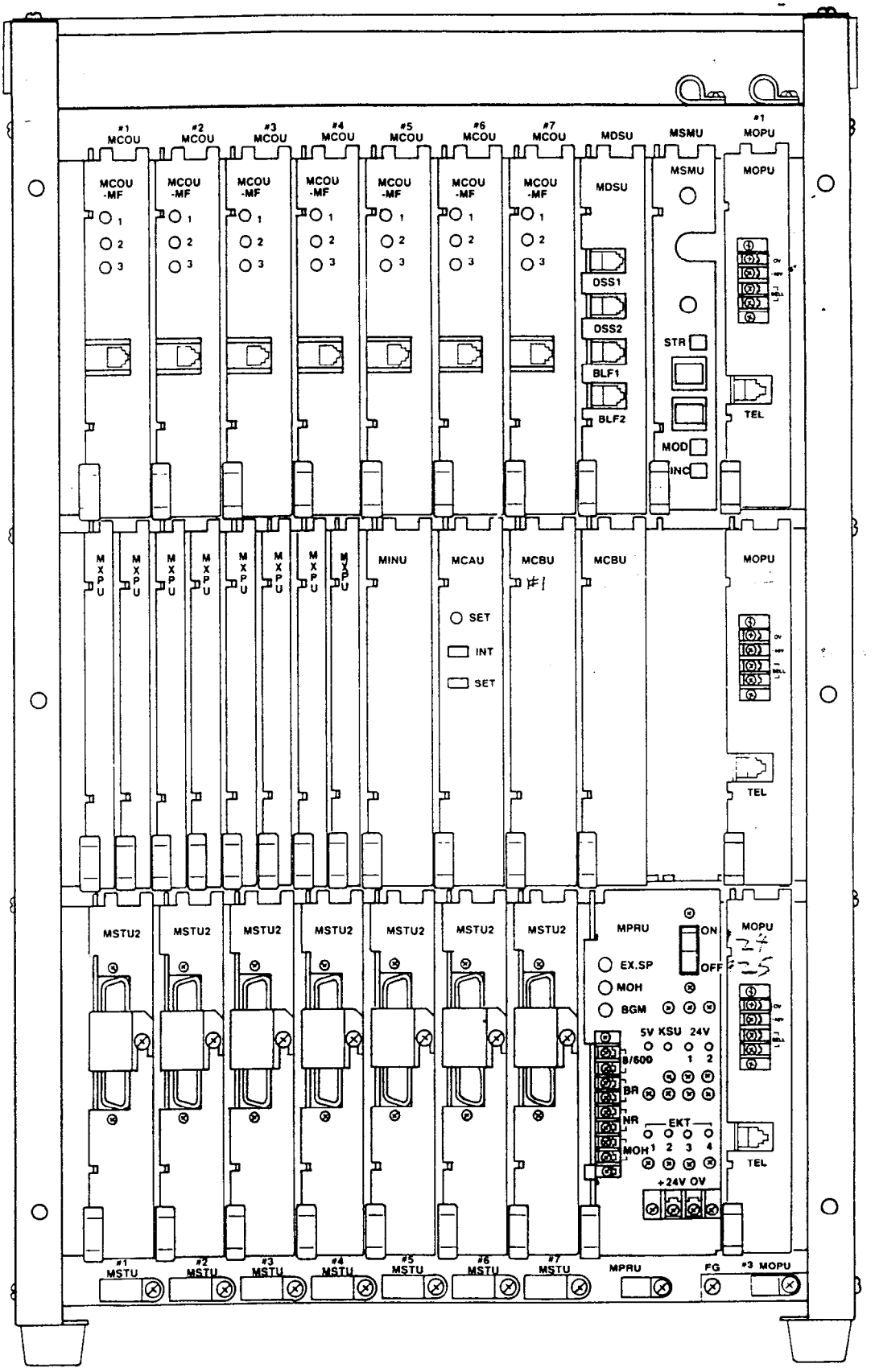

FIGURE 4—STRATA XX MKSU (Interior)

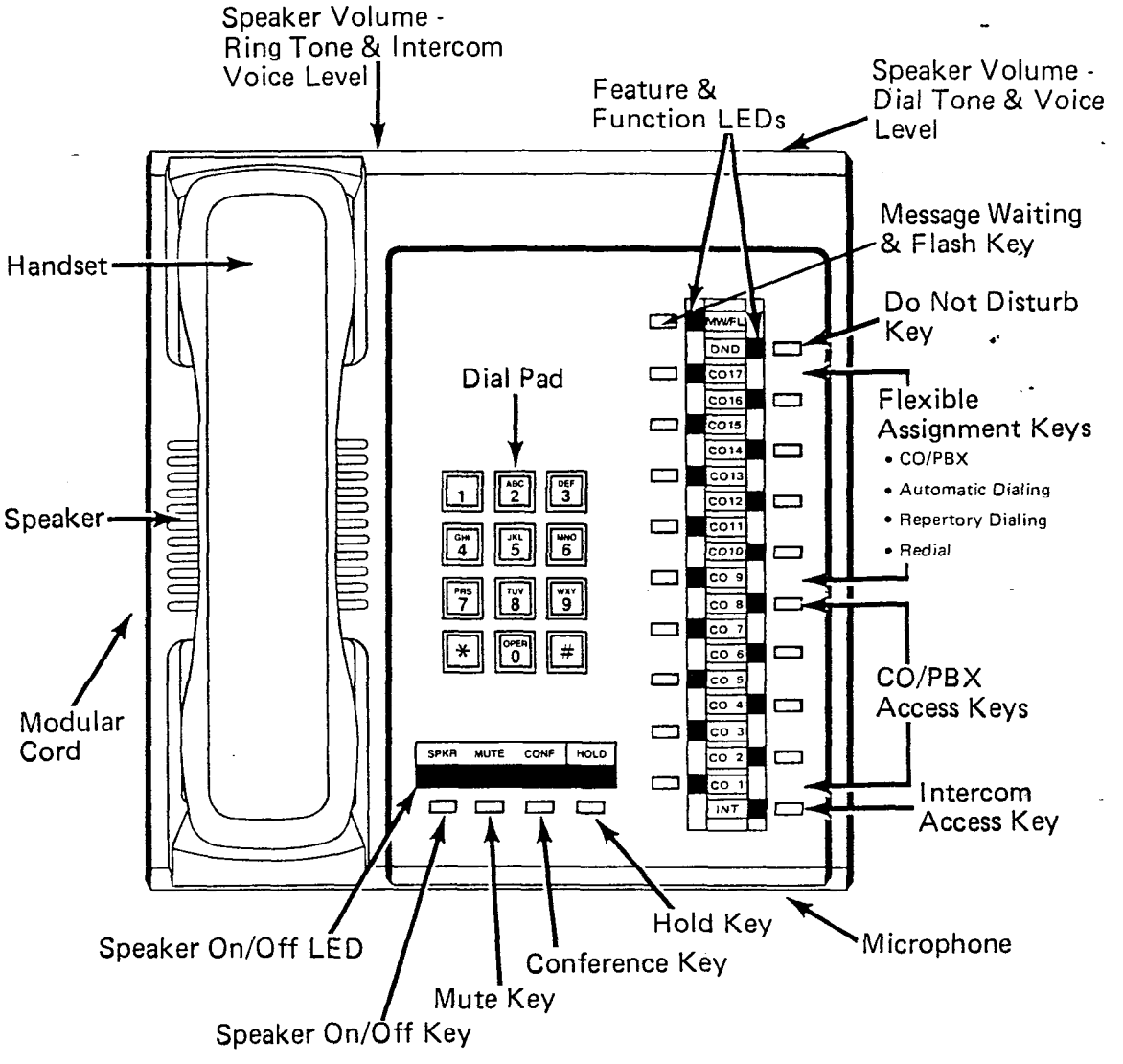

FIGURE 5—20-key EKT

02.13 Software assignment permits the 10-key EKT (Figure 6), having the same dimensions as the 20-key EKT, to be alternately assigned to any station (with the ~~exception~~ of ~~station 17~~). This 10-key EKT has full access to seven CO/PBX lines and can receive transferred calls on the other lines.

02.14 An optional 10-key BLF EKT may be assigned via software at up to 15 positions (stations 10 through 25, ~~except~~ ~~#17~~, ~~only~~). This EKT has the same dimensions and key features as the 10-key.

02.15 All EKTs feature modular handset cords and are connected to the system via four-conductor modular line cords.

02.20 **Direct Station Selection Console**

02.21 An optional Direct Station Selection (DSS) console (Figure 7) is available for both systems where the volume of incoming calls warrants a dedicated call forwarding location. The dimensions of the DSS are the same as the EKT. The DSS is equipped with up to 56 station keys, an intercom key, an All Call page key, Message Waiting/Flash key and a Night Transfer key. Both systems may be equipped with one or two (which may operate simultaneously) consoles.

02.22 A 20-key EKT, which varies from the standard EKT only in different dedicated key functions and lacking an intercom key (it is on the DSS), must accompany the DSS.

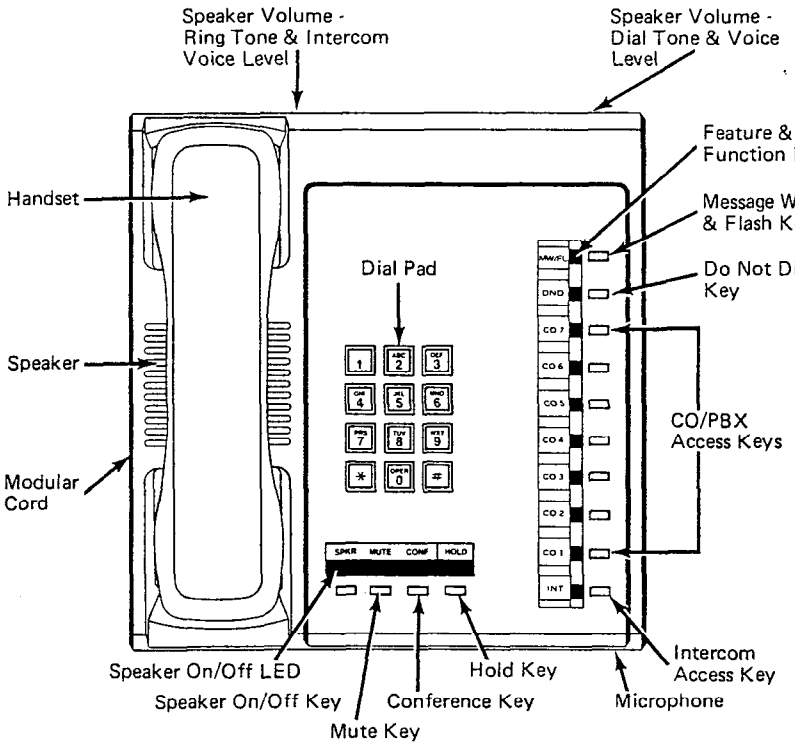

FIGURE 6—10-key EKT

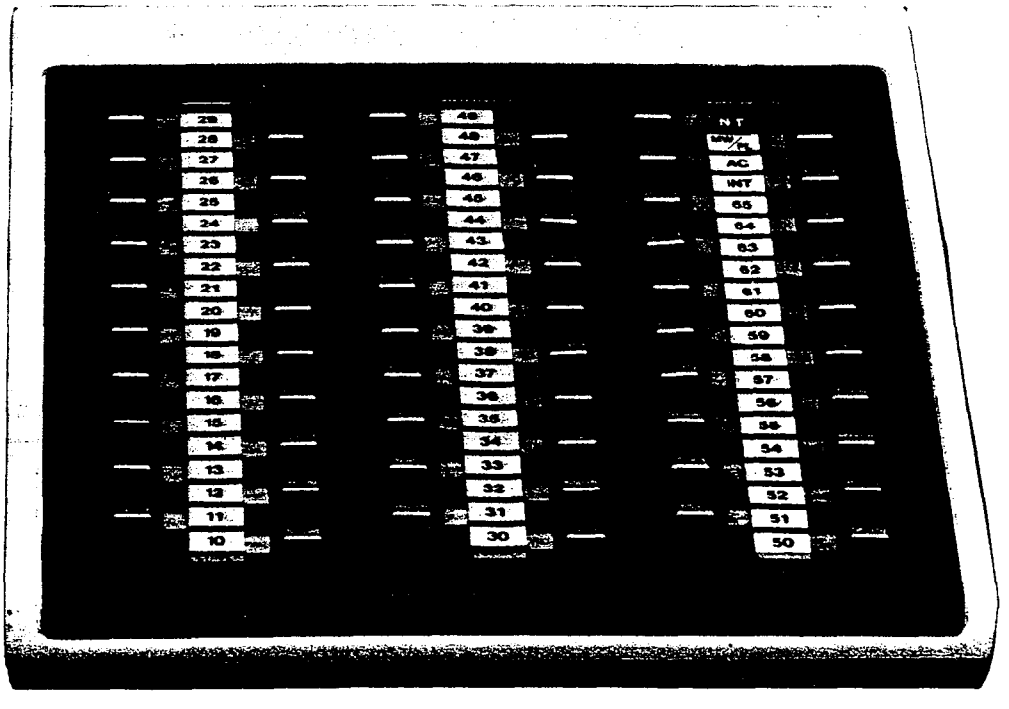

FIGURE 7—DIRECT STATION SELECTION (DSS) CONSOLE

02.23 One or two additional DSS consoles may be optionally added to either system as BLF consoles. Their only function is to provide station status information.

03 ELECTRICAL CHARACTERISTICS

03.01 The electrical characteristics of the system are summarized in Table A.

TABLE A
SUMMARY OF ELECTRICAL CHARACTERISTICS

Station Loop Limits	
EKT	1000 ft. (305 M), 24 AWG
OPX (DTMF)	1200 ohms, 48 VDC
(DP)	1700 ohms, 48 VDC
DSS	500 ft. (152.5 M), 24 AWG
Ringing Tone	
CO Line (idle station)	600/800 Hz, modulated by 16 Hz, 1 sec on — 3 sec off
(busy station)	2400 Hz, modulated by 10 Hz, 1 sec on — 3 sec. off
Intercom Line	600 Hz, 1 sec on — 3 sec off
Busy Override Tone	2400 Hz, 1 sec on — 3 sec off
Dial Tone (Intercom)	600 Hz, continuous
Ring-back Tone	600 Hz, 1 sec on — 3 sec off
Busy Tone	600 Hz, 0.25 sec on — 0.25 sec off
Do Not Disturb Tone	600 Hz, 0.12 sec on — 0.12 sec off
Voice Page Warning Tone	600 Hz, 1 sec on only (via EKT speaker)
Exec. Override Warning Tone	600 Hz, 0.5 sec on only (via handset)
Dialing	Push-button; system generated DTMF or dial pulse
Primary Power	90 ∿ 130 VAC, 60 Hz
Hold Recall Tone	2400 Hz, modulated by 10 Hz, 1 sec on — 1 sec off
Environmental Specifications	
Operating Temperature	32 ∿ 122°F (0 ∿ 50°C)
Operating Humidity	20 ∿ 80% relative humidity (without condensation)

03.02 The MKSU operates from an external 24 VDC power supply.

03.03 Loss of AC power will cause operational failure of the system. System memory, however, is protected from loss due to power failure by internal battery power. Full system reserve power is available as an option.

NOTE:
The batteries used are designed to maintain full memory protection for up to five years with no external power source applied.

04 FEATURES and SERVICES

04.01 The features and services of the STRATA electronic key telephone systems are summarized in Tables B and C, which list the standard and optional features respectively.

TABLE B
STANDARD FEATURES

SYSTEM

- All Call Voice Page
- Automatic Callback (Intercom)
- Automatic Dialing-System
- Automatic Hold Recall
- Automatic Privacy
- Automatic Release from Hold
- Background Music with Station Control
- Busy Override
- Conference-Multi-station
- Conference-Multi-trunk
- Directed Call Pick-up
- Distinctive Ringing
- DTMF and Dial Pulse Compatible
- External Page Interface
- Flash Key-PBX Transfer or CO Dial Tone Recall
- Flexible Line Ringing Assignment
- Group Paging
- Live System Programming
- Message Waiting
- Multiple Simultaneous Handsfree Intercom Paths
- Music-on-hold Interface
- Night Ringing Over External Page
- Night Transfer
- Non-blocking Dialing
- Outgoing Call Restriction
- PBX Compatible
- Private CO Lines
- Repeat Last Number Dialed
- Tenant Service
- Toll Restriction
- Voice or Tone Signalling

STATION

- Do Not Disturb
- Do Not Disturb Override
- Executive Override of Privacy
- Handsfree Answerback
- I-called Illumination
- I-hold Illumination
- I-use Illumination
- Modular Handset and Line Cords
- Mute Key
- On-hook Dialing
- Push-button Dialing
- Ringing Line Preference
- Speakerphone

TABLE C
OPTIONAL FEATURES

- Automatic Dialing-Station
- Direct Station Selection Console:
  - All Call Voice Page
  - Automatic Line Hold
  - Expanded Line Appearance
  - Multiple DSS Consoles
  - Night Transfer
  - Voice or Tone Signalling
- Off Premise Extension (OPX)
- Off Premise Line (OPL)
- Relay Service
  - External Page
  - Night Relay Service
- Station Message Detail Recording (SMDR)
- System Battery Back-up
- 10-key EKT
- 10-key BLF EKT
- Wall Mounting Kit for EKT
- Wall Mounting Kit for MKSU

05 SYSTEM OPERATION

05.01 The system (Figure 8) consists of an MKSU, power supply and up to 32 (STRATA XII) or 56 (STRATA XX) electronic key telephones (EKTs). All connections between the MKSU and EKTs are made via a customer-provided main distribution frame (MDF). Using modular line cords, the CO lines are then connected between the MCOU PCBs and the telephone company-provided RJ-25C jacks. An external tuner (or equivalent) is required if the music-on-hold feature is utilized.

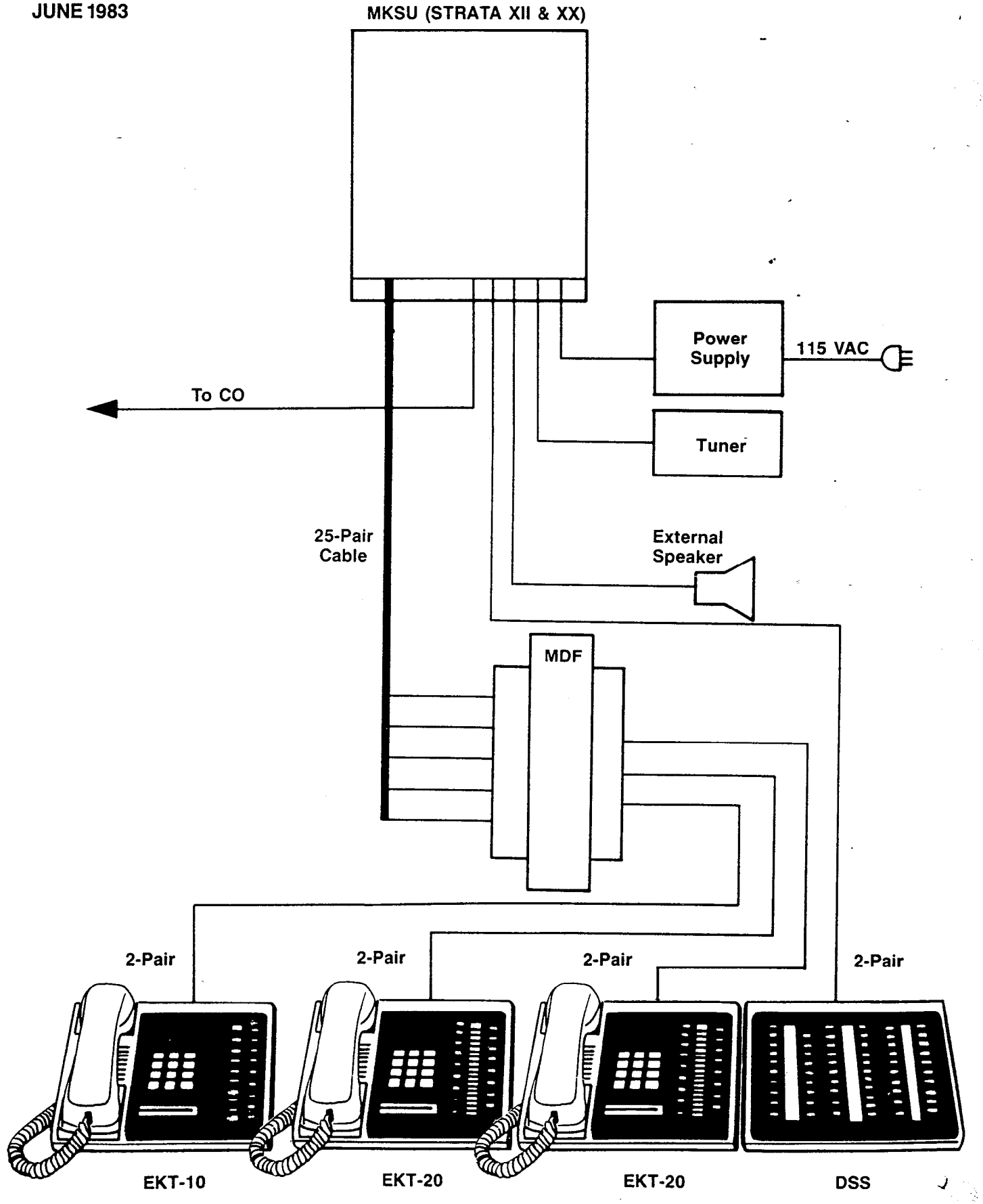

FIGURE 8—SYSTEM DIAGRAM

05.02 Functional block diagrams of the systems are shown in Figures 9 (STRATA XII) and 10 (STRATA XX). The systems, which are nearly identical, consist of: station interfaces (MSTU), which include a portion of the solid-state switching matrix; the MXPU PCBs, containing the remainder of the switching matrix; the CO line interfaces (MCOU); the intercom circuits (MINU); DSS interface (MDSU); power, paging and MOH interface (MPRU); the central control consisting of the MCAU/AMMU (the AMMU PCB mounts directly on the MCAU and is required in all systems) and MCBU (STRATA XX uses two MCBUs, STRATA XII, only one); off-premise extension (OPX) interface (MOPU); and the SMDR interface (MSMU).

05.03 The systems are entirely under the control of a single chip microprocessor, located, along with the system program and data memories, on the MCAU/AMMU PCBs. The MCBU PCB houses the microprocessor used to transmit and receive data to and from the other PCBs.

06 SYSTEM CONFIGURATION

06.00 Key Service Units

06.01 The MKSU arrangements illustrated in Figures 3 (STRATA XII) and 4 (STRATA XX) show the locations of the various PCBs. All PCBs slide in from the front of the cabinet, and, although the rear panel of the MKSU is removable, rear access is usually not required.

06.02 Complete with all available options, the STRATA systems utilize 12 different printed circuit boards. The functions of these PCBs are:

MCOU (MF or DP):
An interface between the MKSU and the public telephone network or PBX lines. Ring detection, hold and dial outpulsing are performed by this PCB. Depending upon local CO requirements, an MF or DP type of MCOU will be provided (MF for DTMF outpulsing, DP for rotary dial outpulsing). Each MCOU PCB serves up to three CO/PBX lines.

MSTU:
An interface between the MKSU and EKTs, which includes a portion of the system's solid-state space division matrix. Each MSTU PCB services up to eight EKTs. Two-pair wiring is required for each EKT; one pair carrying voice and the other pair carrying data to and from the EKT.

MXPU:
Contains the solid-state crosspoints which make up the remainder of the space division switching matrix. Each PCB services up to 16 stations and provides access to 12 CO lines plus four intercom paths, or nine CO lines and two intercom paths, depending upon its position in the system.

MCAU/AMMU:
The AMMU is required and mounts directly on the MCAU to form a single unit. All system control functions are performed by the single chip microprocessor located on the MCAU. The system program stored in ROM, the RAM for system operations and the battery-protected RAM for system data storage are located on the AMMU.

MCBU:
Contains a microprocessor and serves to offload the main CPU by handling the routine and repetitive data transmission tasks to and from the peripheral equipment. One MCBU is used in STRATA XII, while two are required in any STRATA XX system that is equipped with more than 32 stations.

CRDU:
This optional PCB provides the additional memory capacity required for the Automatic Dialing-Station feature. The RAM containing the additional memory capacity is battery-protected. The CRDU mounts directly on the MCBU and/or MDSU. A maximum of two CRDUs are used in STRATA XII, while STRATA XX may use as many as three.

MDSU:
An optional PCB that serves as an interface between the DSS console(s) and the MKSU (only one MDSU is used in each system). The MDSU serves up to two fully functional DSS consoles and two DSS consoles that are used as Busy Lamp Field terminals only.

MINU:
Generates system tones and provides the switching matrix for the delivery of tones for both paging and intercom connections (one per system).

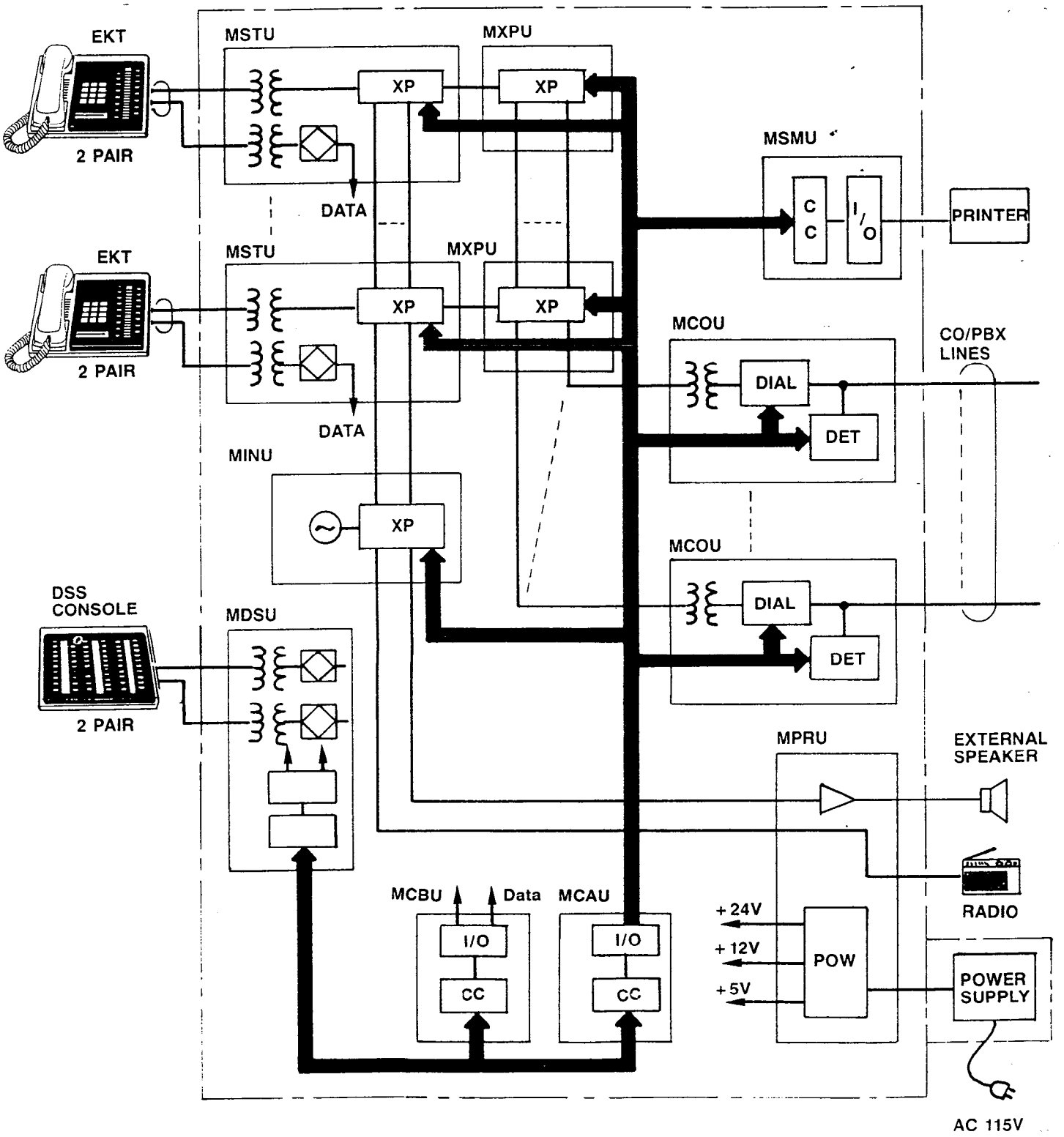

FIGURE 9—STRATA XII FUNCTIONAL BLOCK DIAGRAM

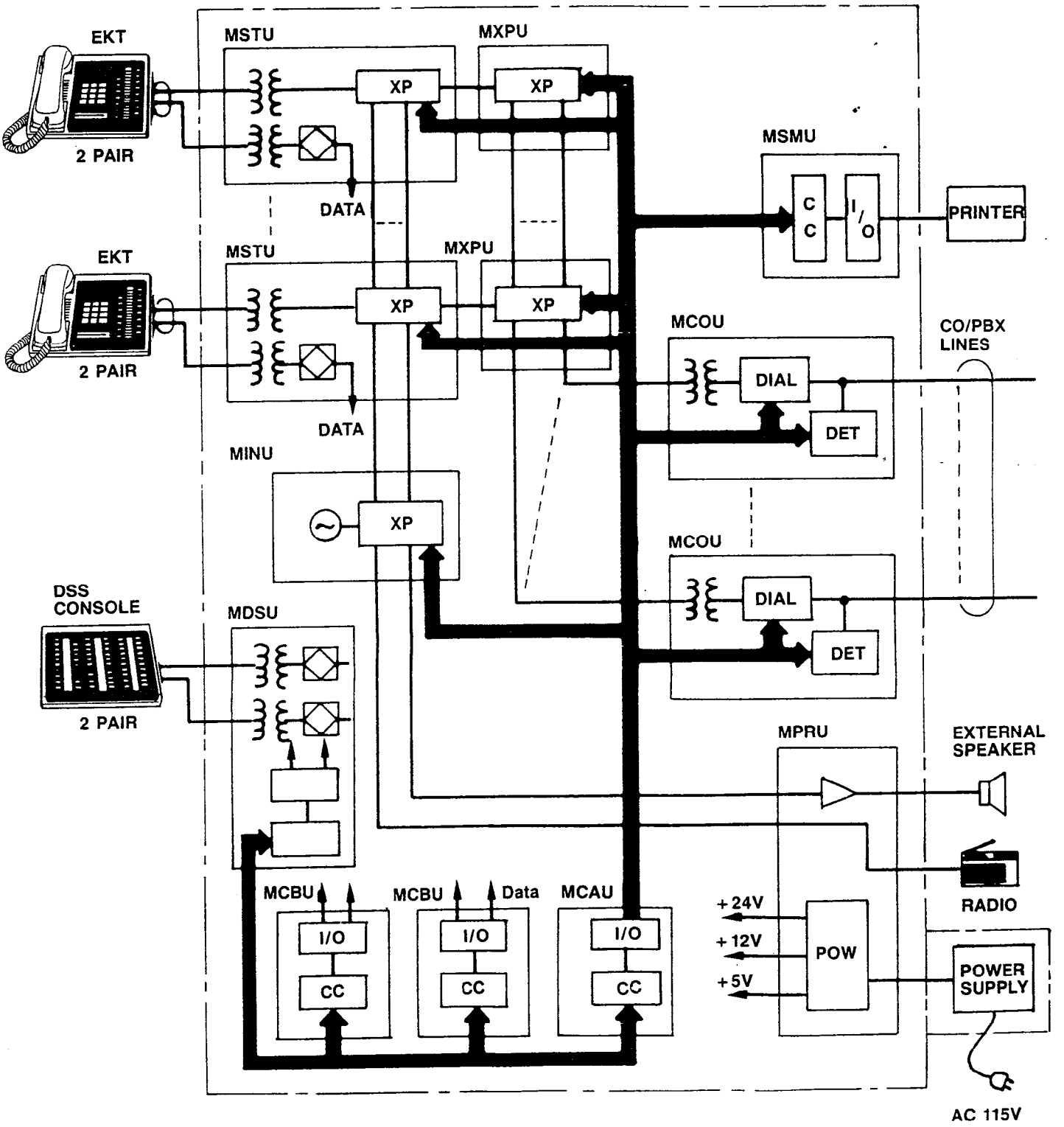

FIGURE 10—STRATA XX FUNCTIONAL BLOCK DIAGRAM

MPRU – one per system:
Performs several system functions:

- Provides connection points for the 24 VDC input power.
- Houses the voltage regulators that provide 12 VDC and 5 VDC for system operation.
- Houses circuitry and connection points for the relay services and music-on-hold (MOH).
- Houses the external page amplifier.

MOPU (DP or MF/DP):
An optional PCB that serves as an interface between the MKSU and conventional, single line telephones or off-premise extension (OPX) lines. Each MOPU PCB services two extensions. A maximum of two MOPUs can be installed in STRATA XII and three in STRATA XX. An MOPU DP will operate with rotary dial-type telephones only. Either DTMF or rotary dial telephones can be used with an MOPU MF/DP PCB.

MSMU/SCNU:
The SCNU is required and mounts directly on the MSMU to form a single unit. This optional PCB serves as an interface between the MKSU and a printer or storage device used for the SMDR feature. The PCB is equipped with an RS 232C-type interface (one per system).

MPLU/POPU (MF or DP):
The POPU is required and mounts directly on the MPLU to form a single unit. This optional PCB allows the bridging of a CO/PBX line (which appears in the STRATA system) with a conventional telephone. OPL telephones thus connected will automatically cause a busy indication within the STRATA system and establish system privacy when initiating or answering a call on the dedicated CO line. The MPLU serves up to three CO/PBX line/OPL combinations and replaces the MCOU that would usually serve these lines. A maximum of one MPLU may be used per system.

06.10 Power Supply Assembly

06.11 The separate power supply is a fixed unit complete with a wall mounting bracket. Attachment to a wall or other fixed surface is via two ¼ inch toggle bolts or screws. The unit can accommodate "brown out" conditions or high voltages within a range of 90 ∿ 130 VAC, 60 Hz. A 10-ft. AC power cord allows flexibility in locating the power supply during installation.

06.12 An optional battery back-up unit (PBBU) is available for the power supply. It is a printed circuit board that mounts inside the power supply housing and is connected to the recommended battery pack (which is customer-supplied, consisting of two 12 VDC, maintenance-free, automobile-type batteries — 80 amp/hour maximum rating). With the optional battery back-up assembly installed, all functions of the STRATA systems will continue to operate for several hours (the actual time period is in direct ratio to the type and size of batteries selected) after a loss of normal electrical power. No calls will be disconnected during switch-over to battery power.

06.20 Station Equipment

06.21 Standard electronic key telephone (EKT) features include full speakerphone capability, handsfree answerback and modular handset and line cords.

06.22 The principal components of the STRATA 20-key EKT are: handset, dial pad, speaker, ringing volume control, speakerphone volume control, intercom key, 17 CO/PBX line keys (or with up to seven Automatic Dialing keys) and six feature keys. LED indicators are provided for all keys except the HOLD, CONF and MUTE keys.

06.23 In addition, software options allow complete compatibility of the STRATA VI EKT with both of the STRATA XII & XX systems. This 10-key EKT will have direct access to seven CO/PBX lines, but can receive transferred calls on all other unrestricted CO/PBX lines.

06.24 The optional 10-key BLF EKT may be assigned via software at up to 15 positions (stations 10 through 25, except #17, only). This EKT has the same dimensions and key features as the 10-key.

06.25 An optional Direct Station Selection (DSS) console is available for both systems where the volume of incoming calls warrants a dedicated call forwarding location. The dimensions of th DSS are the same as the EKT. The attendant

EKT varies from the standard EKT only in different dedicated key functions and lacking an intercom key (it is on the DSS). The DSS is equipped with up to 56 station keys, an intercom key, an All Call page key, Message Waiting/Flash key and a Night Transfer key. Either system may be equipped with one or two fully functional DSS consoles.

06.26 One or two DSS consoles may be optionally added to either system as BLF consoles. Their only function is to provide station status information.

06.27 Utilizing the 20-key EKT, thirteen different configurations of line and feature assignments are available. Some options include 17 CO/PBX lines, while others offer up to seven Automatic Dialing keys with a corresponding reduction in available CO/PBX keys.

06.28 The 10-key EKT offers five variations of key assignments, which differ only in CO/PBX line appearance.

06.30 Installation

06.31 The STRATA MKSUs are arranged at the factory for table-top mounting, but the use of the optional wall mount bracket and a simple reversal of the back panel quickly converts them for wall mounting.

06.32 All connections to the MKSUs are made via the faceplates of the various printed circuit boards.

- CO/PBX line connections are made to the front of each MCOU using one 3-pair modular cord for each card.

- Each group of eight EKTs is connected to the front of each MSTU with one standard 50-pin amphenol-type connector.

- DSS connections are made to the front of the MDSU PCB with one 2-pair modular cord for each DSS.

- Screw-terminal barrier strips are mounted on the front of the MPRU to provide attachment points for the following connections:

  24 VDC power input
  Music-on-hold source input
  External page output
  Night relay service
  External page relay service

- An RS 232C-type plug is provided on the MSMU for connecting the SMDR printer.

- OPX connections for two circuits are made to the front of the MOPU PCB by using a single 2-pair modular cord. External DC and ringing power is connected to the MOPU via a screw-terminal barrier strip.

- OPL connections are made via 6-wire modular cords to the front of the MPLU. Two cords are required; one cord is connected to the CO jack and serves up to three CO/PBX line connections as with an MCOU (the MPLU occupies an MCOU PCB position), the second 6-wire cord connects to the OPL jack and serves the three OPL stations provided by that PCB.

06.33 The power supply is mounted to the wall separately from the MKSU and connected to the 24 VDC input on the MPRU PCB.

06.40 Maintenance

06.41 Faults in both STRATA systems are repaired by replacing any faulty component (PCB, subassembly, telephone, etc.) and returning it to the manufacturer for repair.

07 FEATURES and OPERATION

07.00 General

07.01 This section contains brief descriptions of the STRATA features listed earlier in Tables B and C and some associated operating instructions. Detailed operating instructions can be found in the STRATA XII and XX **USER GUIDE** or Section 100-020-400, *Operating Procedures*.

07.10 Standard Features

07.11 System

All Call Voice Page:
Dialing a 2-digit access code permits a station user to page via all EKT speakers simultaneously. The system can also be programmed to include the External Page feature in an All Call Page.

Automatic Callback (Intercom):
Permits a station user who encounters a busy station on intercom to request a callback by dialing a dedicated access code. The system then monitors the called station and signals the caller when it becomes idle.

Automatic Dialing-System:
This standard feature allows 24 numbers to be stored in the system memory. After selecting an outgoing line, any station user can cause one of the stored numbers to be outpulsed by dialing the proper access code.

Automatic Hold Recall:
A CO line placed on hold by any station will recall that station after a programmable period of time.

Automatic Privacy:
Privacy is automatic on all connections (except OPL).

Automatic Release from Hold:
The system automatically releases held CO lines if a disconnect signal is received from the central office.

Background Music with Station Control:
Music from the music-on-hold source can, at the station user's option, be heard via the EKT speaker. The same music may also be broadcast via the external page interface if an external speaker is installed.

Busy Override:
After dialing a busy station and receiving a busy tone, the caller can dial a [2] and cause a tone burst to be sounded via the called EKT speaker.

Conference-Multi-station:
Conferencing is permitted to a maximum of four stations and one CO or intercom line.

Conference-Multi-trunk:
Conferencing of two CO lines and three stations is permitted.

Directed Call Pick-up:
Intercom calls can be answered from any station by going off-hook, *without* siezing a line, and dialing the number of the ringing station.

Distinctive Ringing:
CO line and intercom calls are distinguished by different ringing tones.

DTMF and Dial Pulse Compatible:
DTMF or rotary dial pulse signalling can be sent to the CO/PBX line by installing the proper MCOU PCB type.

External Page Interface:
Dialing a 2-digit code permits a station user access to a customer-provided external speaker via an internal 3-watt amplifier. As an option, a 2-way, 600-ohm voice path is available for use with a customer-supplied talk-back speaker/amplifier.

Flash Key-PBX Transfer or CO Dial Tone Recall:
All EKTs are equipped with a Message Waiting/Flash (MW/FL) key which, when operated while connected to a CO/PBX line, causes a timed "flash" to be transmitted to the CO or PBX. The timing of the flash can be programmed to signal a PBX for feature operation or can be long enough to cause a disconnect and dial tone recall on a CO line. Also see Message Waiting.

Flexible Line Ringing Assignment:
A programmable ring or no ring option is provided for each line selectively by each station. Each line may be programmed to ring a maximum of eight stations.

Group Paging:
Special 2-digit access codes (81, 82, 83 or 84) permit voice paging to one of four zones. Zone assignment is via software and is totally flexible. Paging is via the EKT speakers.

Live System Programming:
Live system programming is accomplished without service interruption to other station users by placing the system in the special programming mode and inputting data via station 17. Station 17 is the only station that is "down" during programming.

Message Waiting:
The designated Message Center can indicate a message is waiting for any station with the Message Waiting LED of that station. The called station cancels the LED by lifting the handset and operating the MW/FL key. Also see Flash Key.

Multiple Simultaneous Handsfree Intercom Paths:
Four intercom paths are available in a STRATA XII system and up to six paths in a STRATA

XX. All intercom lines are able to carry hands-free conversations simultaneously.

Music-on-hold Interface:
An interface is included for a customer-provided music source. CO lines placed on hold will be connected to this source. In addition, this music may also be broadcast from EKT speakers and external page when the background music options are selected.

Night Ringing Over External Page:
As a programmable option, while the night mode is active, a system-generated ring tone will be transmitted via the external speaker whenever any line rings (see Tenant Service).

Night Transfer:
On a programmable optional basis, the STRATA systems can function with two or three ringing patterns. If three patterns are selected, they are designated **Day, Day 2,** and **Night.** If only two patterns are selected, **Day** and **Night** designations are used. In both cases, the ringing modes are selected with the [NT] key on either DSS console or station 10 (see Tenant Service).

Non-blocking Dialing:
Dialing is permitted on INT and all CO lines simultaneously.

Outgoing Call Restriction:
Any station can be selectively restricted from originating calls on any or all CO lines. However, the station may still receive calls on the restricted line(s).

PBX Compatible:
STRATA features, such as toll restriction and automatic dialing, are compatible with PBX operation.

Private CO Lines:
Restrictions may be programmed into the system so selected CO line(s) will appear only on selected station(s).

Repeat Last Number Dialed:
The last number dialed by each station is always stored by the system and will be dialed automatically whenever the station user selects an outgoing line and depresses the [#] key.

Tenant Service:
Variable CO/PBX line key assignments allow two tenants to be served from the same MKSU with each tenant's lines appearing in the correct sequence. When Tenant Service is used, Night Ringing Over External Page will apply to lines assigned to Tenant #1 only. Also, Night Transfer of Ringing for Tenant #1 and Tenant #2 lines will be independantly controlled by DSS #1 (station 10) and DSS #2 (station 11), respectively.

Toll Restriction:
Selectively programmed on a per-station, per-line basis, STRATA performs toll restriction by rejecting the numbers "0" and "1" as the first or second digit and limiting the total number of digits dialed to seven or eight.

Voice or Tone Signalling:
A programmable system feature that optionally selects either tone ringing or voice page as the primary method of intercom call signalling. The calling station, however, may choose the alternate method by dialing [1] following the station number.

07.12 Station

Do Not Disturb:
This feature is activated and deactivated by alternate depressions of the [DND] key. A station calling a station that is in the DND mode will receive a fast busy tone.

Do Not Disturb Override:
After reaching a DND station, that station may be advised that a call is waiting by dialing [2]. A tone signal will be heard at the DND station.

Executive Override of Privacy:
A station that is programmed for this feature will override the automatic privacy feature and is able to enter any existing conversation within the system. A warning tone, however, is inserted before the overriding station is actually connected. A maximum of two stations can be programmed for executive override.

Handsfree Answerback:
All EKTs are equipped for handsfree answerback on voice-announced intercom calls as a standard feature.

I-called Illumination:
A distinctive flash appears on the intercom LED at the EKT that is actually being called.

I-hold Illumination:
The EKT user is shown a distinctive LED flash to indicate a line actually placed on hold at the EKT. All other stations see a normal on-hold-flash.

I-use Illumination:
A distinctive flash rate shows the line presently in use at a given EKT. Other stations see a steadly illuminated LED for that line.

Modular Handset and Line Cords:
All EKTs are equipped with modular handset and line cords.

Mute Key:
All EKTs have a [MUTE] key that may be used to cut off the microphone when the speakerphone is in use, thereby permitting a private local conversation.

On-hook Dialing:
STRATA lets you dial your calls with the handset still on-hook. Call progress can be heard via the telephone speaker; no need to pick up the handset until your party answers.

Push-Button Dialing:
All STRATA EKTs are equipped with push-button dial pads.

Ringing Line Preference:
A line ringing at a station can be answered by merely lifting the handset or depressing the [SPKR] key. The ringing line will be automatically selected.

Speakerphone:
All EKTs are fully functional speakerphones.

07.20 Optional Features

Automatic Dialing-Station:
Adding CRDUs to the MCBU and/or MDSU increases the STRATA automatic dialing capabilities from the standard 24 numbers in Automatic Dialing-System to a maximum of 40 telephone numbers in the system directory list and 40 numbers in each station's directory list.

Direct Station Selection (DSS) Console:

a) All Call Voice Page —a single dedicated key on the DSS console (labeled [AC]) will allow the attendant to voice-page via the EKT speakers at all the stations in the system simultaneously. If the External Page has been included in the All Call via system option selection, the [AC] key will operate that as well.

b) Automatic Line Hold—each calling CO/PBX line is automatically placed on hold when the DSS operator activates a station key.

c) Expanded Line Appearance—twenty CO/PBX line keys are available on the EKT associated with the DSS console. The intercom and [MW FL] keys for that EKT are located on the DSS console.

d) Multiple DSS Consoles—the STRATA XII and STRATA XX systems will each support two fully funtional DSS consoles (which may operate simultaneously) as well as two additional consoles functioning only as Busy Lamp Field terminals.

e) Night Transfer—the [NT] key on the DSS console(s) or station 10 controls the system ringing patterns.

f) Voice or Tone Signalling—the DSS may be programmed for tone or voice signalling preference independently of the remainder of the system. As with all stations, the operator can choose the alternate mode by dialing a [1] following the station number.

Off Premise Extension (OPX):
Installing an optional MOPU (DP or MF/DP) PCB, along with auxiliary power and ringing supply, allows the system to interface with conventional single line telephones or off premise circuits. The MOPU serves two extensions and a maximum of two may be installed in STRATA XII and three in STRATA XX.

Off Premise Line (OPL):
Installing an optional MPLU (MF or DP) in place of an MCOU PCB allows the bridging of a CO/PBX line (which appears in the STRATA system) with a conventional telephone. Maximum: one per system.

Relay Service:
When the optional relays are equipped on the MPRU PCB, the following signals are provided for external equipment:

a) External Page—the relay is activated whenever the external page circuit is accessed. A "make" contact is provided for control of background music on external page. This is required only when an external page amplifier is used.

b) Night Relay Service—relay will provide a dry contact at the NR terminals on the front of the MPRU PCB. A strap option on the MPRU allows the NR relay to function in one of two modes:

1) Answering Machine Control—if the strap remains intact, the relay is operated continuously when the system is in night service. This mode is intended for indirect control of an answering machine.

2) Night Bell Control—if the strap is cut, the relay pulses at a 1-sec. on, 3-sec. off rate whenever the system is in night transfer mode and an incoming call is ringing the system. This mode is intended to be used for indirect control of an external night bell.

Station Message Detail Recording (SMDR):
Adding the optional MSMU PCB allows data to be collected for each outgoing and incoming CO line call. This data may be output to a printer or recording device via the RS232C interface located on the MSMU.

System Battery Back-up:
An optional PCB can be installed in the STRATA power supply to provide automatic switching to standby battery power. During normal power conditions the batteries are kept fully charged by the power supply.

10-key EKT:
The 10-key EKT may be assigned to any station except #17. This EKT has full access to seven CO/PBX lines and can receive transferred calls on other lines.

10-key BLF EKT:
The optional 10-key BLF EKT may be used at up to 15 positions (stations 10 through 25, except #17, only). The BLF will display the status of stations 10 through 25.

Wall Mounting Kit for EKT:
The STRATA EKT is easily converted for wall mounting with an optional handset hanger kit.

Wall Mounting Kit for MKSU:
The MKSU is shipped configured for table mounting, but the use of the optional wall mount bracket and a simple reversal of the back panel quickly converts it for wall mounting.

INSTALLATION
SECTION 100-020-200
JUNE 1983

Strata XII & XX

INSTALLATION

INSTALLATION

TABLE OF CONTENTS

PARAGRAPH	SUBJECT	PAGE
	TABLE of CONTENTS	i
	ILLUSTRATION LIST	ii
01	GENERAL	1
02	PACKING	1
03	MKSU LOCATION REQUIREMENTS	2
03.00	Power Requirements	2
03.10	Ventilation Requirements	2
03.20	Environmental Factors	2
03.30	Cabling Considerations	2
04	MKSU MOUNTING	2
04.10	Table Mounting the MKSU	2
04.20	Wall Mounting the MKSU	2
05	PRINTED CIRCUIT BOARDS	5
05.10	MPRU PCB Options	6
06	POWER CONNECTIONS	7
06.00	MPRU PCB Installation	7
06.10	Power Connection	7
07	PCB INSTALLATION	8
07.00	Memory Protection	8
	TABLE A—CRDU POSITIONS	9
07.10	PCB Installation Sequence	10
	TABLE B—MXPU POSITIONS	12
07.20	MSMU Installation	12
07.30	MOPU Installation	13
08	CABLE CONNECTIONS	13
08.00	System Cable Configuration	13
08.10	Main Distribution Frame Configuration	15
08.20	Station Cable Connections	15
	TABLE C—CROSS-CONNECT DATA (STRATA XII & XX)	17
08.30	Intercom Code Assignment	18
	TABLE D—CROSS-CONNECT DATA (STRATA XX)	18
08.40	CO Line Connection	18
08.50	DSS/BLF Connection	19
08.60	OPX/Conventional Telephone Connection	20
08.70	Off Premise Line (OPL) Connection	22
08.80	Station Message Detail Recording (SMDR) Connection	22
09	ELECTRONIC KEY TELEPHONE INFORMATION	23
09.00	General	23
09.10	EKT Wall Mounting	24
09.20	Converting the EKT	25
09.30	EKT Connections	25
10	SYSTEM POWER-UP INITIALIZE	25
10.10	Clearing Automatic Dialing	26
10.20	SMDR Real Time Clock Adjustment	27
10.30	Program Listing	28
11	SYSTEM TEST PROCEDURES	28
11.00	EKT Functional Check	28
11.10	OPX/Conventional Telephone Functional Check	30
11.20	OPL Circuit Functional Check	30
11.30	SMDR Feature Functional Check	31
11.40	Feature Check	32
12	MISCELLANEOUS EQUIPMENT CONNECTIONS	32
12.00	Wiring Connections	32
12.10	Music-on-hold/Background Music Source	32
12.20	Music-on-hold Volume Control	32
12.30	External Paging Connections	32
12.40	Direct External Speaker Connection	32
12.50	External Amplifier Connection	33
12.60	Talkback Amplifier	33
12.70	Background Music	33
12.80	Volume Setting Sequence	33
12.90	Night Relay Service	33

INSTALLATION

ILLUSTRATION LIST

FIGURE	SUBJECT	PAGE
1	CRDU BATTERY STRAP	1
2	AMMU BATTERY STRAP	1
3	MSMU BATTERY STRAP	2
4	MKSU WALL MOUNTING KIT TEMPLATE	3
5	ASSEMBLED MKSU WALL MOUNTING KIT	3
6	MKSU	4
7	MKSU	4
8	MKSU	4
9	MPRU RELAY SOCKETS & SWITCH	6
10	RELAY INSTALLED WITH SW2 SWITCH	7
11	POWER SUPPLY-TO-MKSU WIRING	7
12	AMMU ONTO MCAU	9
13	CRDU ON MCBU	9
14	CRDU ON MDSU	9
15	PCBs IN MKSU (STRATA XII)	10
16	PCBs IN MKSU (STRATA XX)	11
17	MSMU CONNECTION STRAPS	12
18	MSMU/RS 232C CONNECTOR	13
19	MOPU CONNECTION STRAPS	13
20	SYSTEM DIAGRAM	14
21	MKSU CABLE CLAMPING	15
22	MKSU CABLE ROUTING	15
23	MDF/EKT WIRING	16
24	RJ25C WIRING	19
25	MKSU TOP COVER REMOVAL	19
26	MKSU UPPER CABLE ROUTING	19
27	MDSU WIRING	20
28	MOPU WIRING	21
29	MPLU WIRING	22
30	MSMU-TO-PRINTER CABLING	23
31	20-key EKT	23
32	10-key EKT	24
33	REMOVING EKT BASE	24
34	EKT WIRE ACCESS	24
35	EKT WIRE ROUTING	25
36	HANDSET HANGER KIT	25
37	AMMU BATTERY STRAP	25
38	SYSTEM INITIALIZING (STRATA XII)	26
39	SYSTEM INITIALIZING (STRATA XX)	26
40	MSMU FACEPLATE	28
41	SMDR PRINTOUT EXAMPLE (OUTGOING CALL RECORD)	31
42	SMDR PRINTOUT EXAMPLE (INCOMING CALL RECORD)	31
43	MPRU CONNECTION STRIP	32
44	IMPEDANCE SWITCH ON MPRU	32
45	EXTERNAL AMPLIFIER HOOK-UP	33
46	VOLUME SETTING CONTROLS	34
47	NR CONTACTS	35

01 GENERAL

01.01 This section describes the installation precedures necessary to ensure proper operation of the STRATA XII & XX systems. The installation procedures for the two systems vary only in relation to size; all other factors are the same.

02 PACKING

02.01 When a STRATA system is received, examine all packages and carefully note any visible damage. If any damage is found, bring it to the attention of the delivery carrier and make the proper claims.

02.02 Check the number of cartons and the contents of the STRATA shipment against the purchase order and packing slip. If it is determined that any cartons are missing, contact your delivery carrier immediately. If it is determined that any equipment within a carton is missing, contact your Toshiba supplier immediately.

02.03 After unpacking (prior to beginning the installation), inspect all equipment for damage. If any damage is detected, contact your delivery carrier immediately. If possible, retain all the original packing material.

CAUTION:
When handling (installing, removing, examining, etc.) a printed circuit board, do not touch the back (soldered) side or the edge connector. Always hold a PCB by its edge.

02.04 When packing or storing a CRDU, AMMU, or MSMU, ensure the following:

Do not use plastic or any type of conductive material for packing either a CRDU, AMMU, or MSMU. *Use* plain paper.

CAUTION:
Conductive packing material may cause the internal back-up battery to discharge and damage the PCB.

02.05 Whenever storing or shipping a CRDU, AMMU or MSMU always ensure that the battery strap is in the OFF position. See Figure 1 for the CRDU, Figure 2 for the AMMU, Figure 3 for the MSMU.

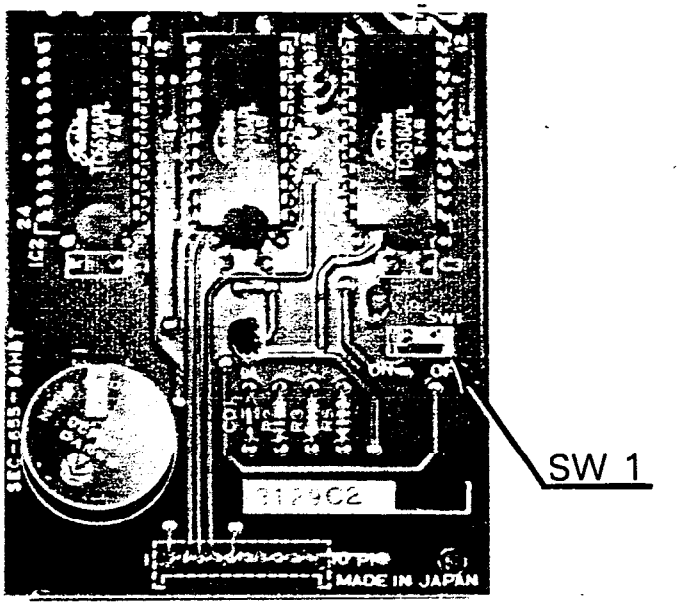

FIGURE 1—CRDU BATTERY STRAP

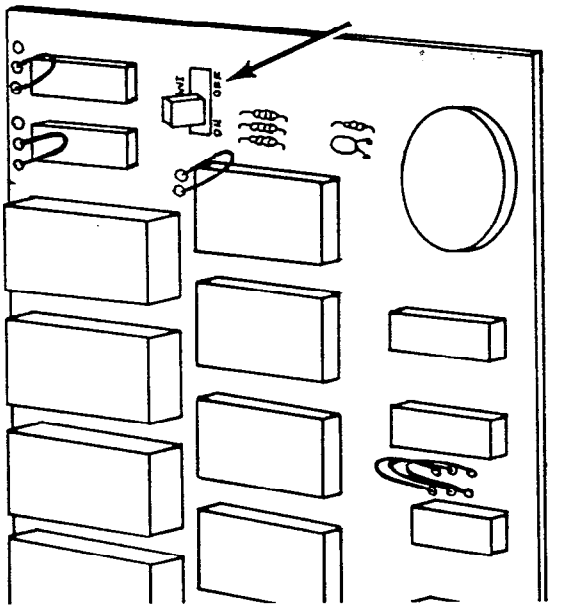

FIGURE 2—AMMU BATTERY STRAP

NOTE:
Always make sure the battery strap on the AMMU is in the "ON" position just prior to installation. ***If not, the SET LED on the MCAU will not operate.*** *Also, if equipped, ensure that the battery straps on the CRDU(s) and MSMU are in the "ON" position.*

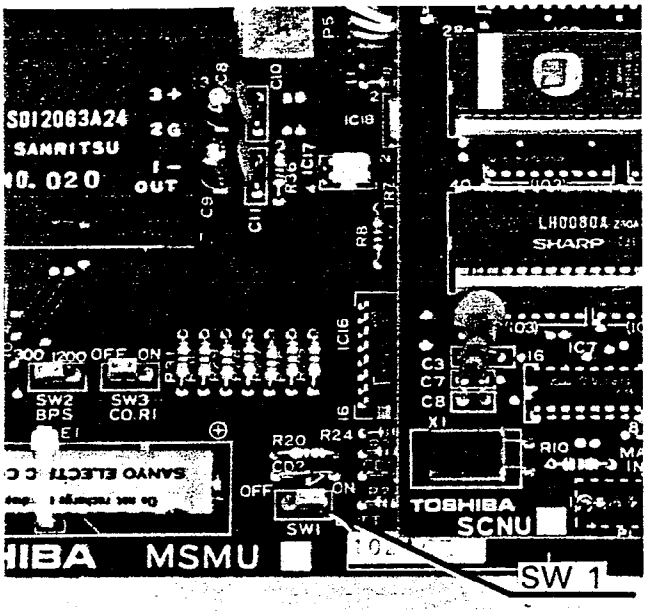

FIGURE 3—MSMU BATTERY STRAP

03 MKSU LOCATION REQUIREMENTS

03.00 Power Requirements

03.01 The STRATA MKSU (both XII & XX) requires 24 VDC. This is provided by the power supply (EPSA), which in turn requires power from a grounded 115 VAC outlet. The outlet should be separately fused and rated at 15 amps.

03.02 The same EPSA power supply is used with both STRATA systems.

03.03 The 54-inch cord provided to connect the EPSA to the MKSU dictates the relative location of the power supply. The power supply is also equipped with a 10-ft. AC power cord.

03.04 An optional battery back-up unit (PBBU) is available for the power supply. It is a printed circuit board that mounts inside the power supply housing. The recommended battery pack, which is customer-supplied, consists of two maintenance-free automobile 12 VDC batteries (maximum 80-amp/hr rating). With the optional PBBU assembly installed, all functions of either STRATA system will continue to operate for several hours after a loss of normal electrical power (the actual period of time is in direct ratio to the type and size of batteries selected). No calls will be disconnected during switch-over to battery power.

03.10 Ventilation Requirements

03.11 Sufficient ventilation should exist to allow dissipation of the heat generated by the power supply and MKSU.

03.20 Environmental Factors

03.21 Humidity at the MKSU location should be within 20~80% (without condensation), and the temperature should be relatively constant within a range of 32~122°F (0 ~ 50° C). Exposure to dust and airborne chemicals should also be taken into consideration.

03.30 Cabling Considerations

03.31 The MKSU must be located so that all stations are within 1000 cable feet (305 m) of it. The DSS console must be located within 500 cable feet (152.5 m) of the MKSU. Acceptable cable is 22 or 24 AWG inside telephone station cable, jacketed but not shielded, having two or more twisted wire pairs.

04 MKSU MOUNTING

04.01 The MKSU is designed for either table or wall mounting (using the MKWM Wall Mounting Kit), but is factory-configured for table mounting. For wall mounting instructions, refer to Paragraph **04.20**.

04.10 Table Mounting the MKSU

04.11 Since the MKSU is already configured for table mounting, the only requirement is to choose a suitable location and proceed to Section 100-020-250, *Power Supply Installation.*

04.20 Wall Mounting the MKSU

IMPORTANT:
If one or more MOPU PCBs are required in the system, review Paragraph 07.20, MOPU Installation, prior to mounting the MKSU. An MCBL (MOPU receiving connector) for each MOPU to be equipped must be installed before the MKSU is mounted on the wall.

04.21 The same MKWM Wall Mounting Kit is used for both MKSUs. Each kit consists of:

1	Drilling Template
1	Back Plate
1	Side Plate A
1	Side Plate B
2	Side Angles
12	Binding-head Screws

04.22 Be certain that all parts are included before proceeding.

04.23 In addition to those items supplied in the MKWM kit, six fasteners, suitable for the type of wall chosen, must be supplied by the installer. The fasteners will be used to secure the wall mount bracket and MKSU to the wall. A typical fastener would be:

1/4-in. Toggle Bolt
1/4-in. Molly Fastener
1/4-in. Lag Screw

04.24 Choose a suitable location for the MKSU on a surface of sufficient strength to support its weight. The MKSUs (fully equipped) weigh:

STRATA XII:	52.0 lb (23.6 kg)
STRATA XX:	72.6 lb (32.9 kg)

04.25 Secure the template (Figure 4) to the mounting surface with tape, and perform the following steps:

a) Be sure the template is at the proper height and use a spirit level to make sure it is level.

b) Mark the locations of the six mounting holes. Use the locations marked "A" for STRATA XII and "B" for STRATA XX.

c) Remove the template, and at each point marked, drill a hole suitable for the chosen fastener.

04.26 Assemble and secure the wall mount bracket as follows:

a) Attach the two side plates (A & B) to the back plate using four of the binding-head screws supplied with the kit (Figure 5). Note that three holes are provided on the right side of the back plate. Use the inner two holes for STRATA XII and the outer two for STRATA XX. (When arranged for STRATA XX mounting, the side plate will extend beyond the back plate.)

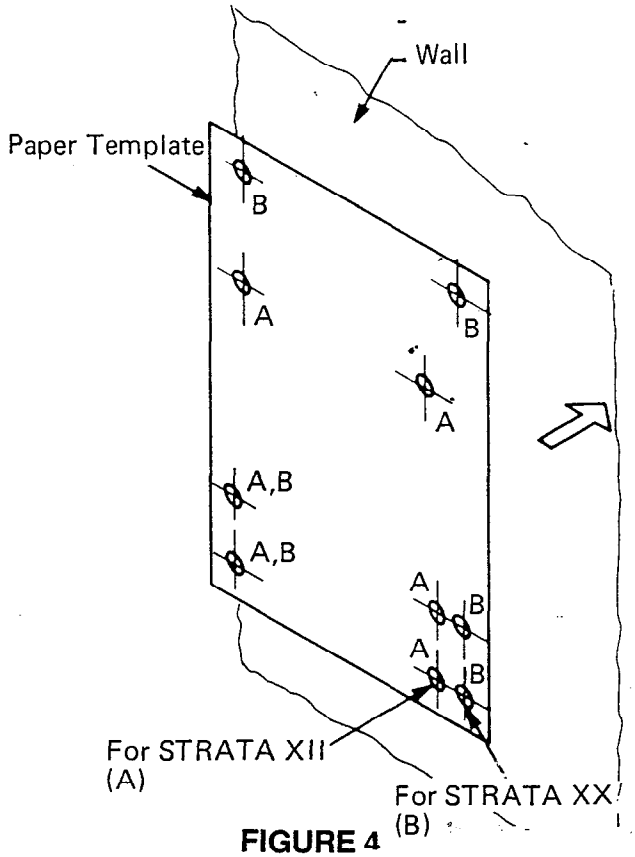

FIGURE 4
MKSU WALL MOUNTING KIT TEMPLATE

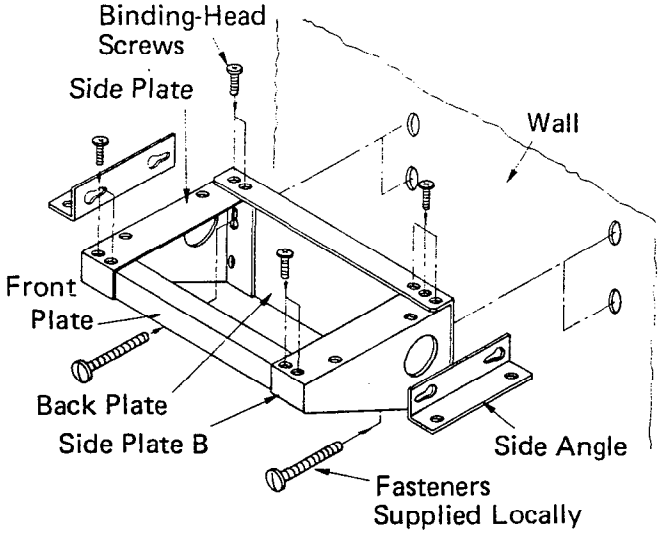

FIGURE 5—ASSEMBLED
MKSU WALL MOUNTING KIT

b) Attach front plate to side plates with four binding-head screws.

c) Insert two fasteners into the holes in the mounting surface that correspond to the key-

holes in the back plate. Tighten them loosely so that approximately 3/8-in. gap remains between the head of the fastener and the mounting surface.

d) Install the wall mount assembly by slipping the two keyholes in the back plate over the two fasteners installed in Step C.

e) Install the lower two fasteners in the back plate and tighten all four fasteners securing the wall mount assembly.

04.27 The MKSU must be prepared for wall mounting by reversing the back cover. This will locate the two mounting holes at the top of the MKSU. To reverse the back cover, proceed as follows:

a) Loosen all seven screws securing the back cover (Figure 6).

b) Remove and save the three screws indicated in Figure 6, lift the back cover off.

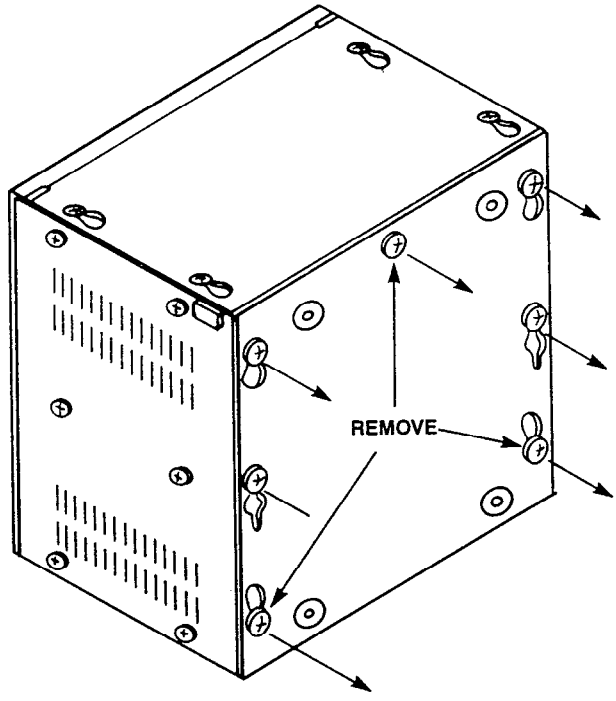

FIGURE 6—MKSU

c) Rotate the back cover 180° and realign it so the two mounting holes project above the MKSU (Figure 7).

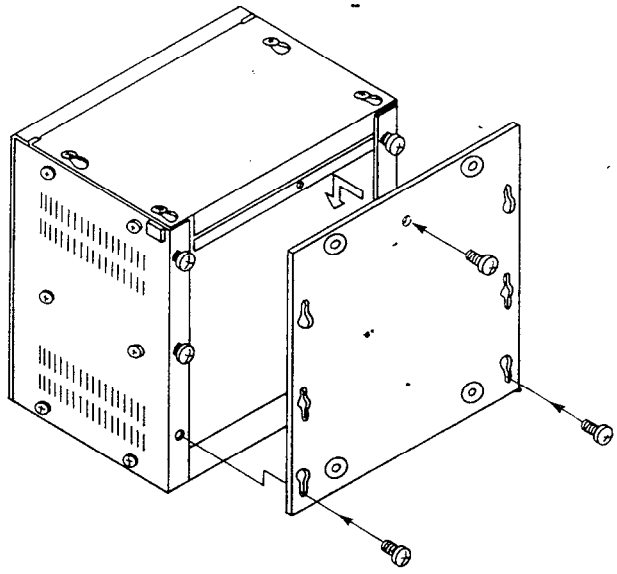

FIGURE 7—MKSU

d) Reinstall the back cover. Secure it with the four loosened screws.

e) Reinstall and tighten the three screws removed earlier.

04.28 Refer to Figure 8, and complete the wall mount installation as follows:

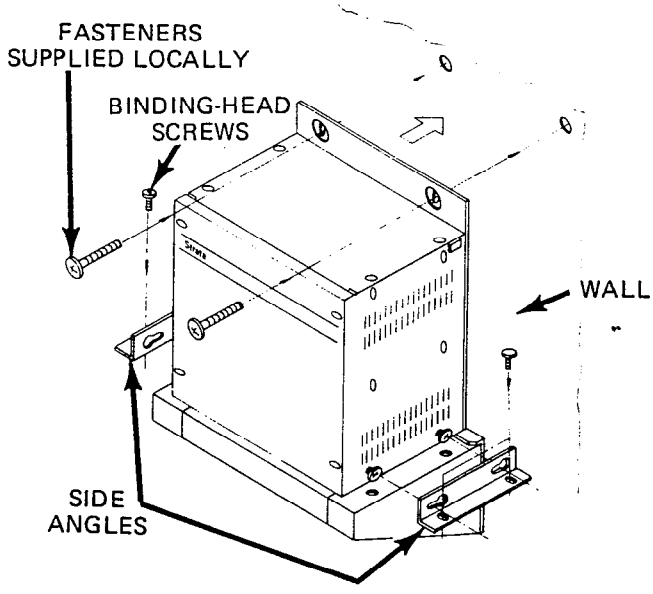

FIGURE 8—MKSU

a) Rest the MKSU on the wall mount assembly and loosen the two screws located near the bottom of each side of the MKSU.

b) Loosely attach the side angles to the lower sides of the MKSU by sliding their keyholes over the previously mentioned screws.

c) Ensure that the side angles are properly aligned with the holes in the mounting bracket and that the two top holes are aligned with the holes in the mounting surface.

d) Fasten the MKSU to the mounting surface loosely, using the locally-supplied fasteners through the upper mounting holes.

e) Using four of the provided binding-head screws, secure the side angles to the wall mounting bracket.

f) Tighten the screws holding the side angles to the sides of the MKSU.

g) Tighten the fasteners securing the MKSU to the mounting surface.

04.29 Prior to installing any printed circuit boards, install the power supply per instructions in Section 100-020-250, *Power Supply Installation.*

05 PRINTED CIRCUIT BOARDS

05.01 Complete with all available options, both STRATA systems utilize 15 different PCBs, with a maximum of 18 for STRATA XII and 32 for STRATA XX. They are:

MPRU — one per system:
Performs several system functions:

- Provides connection points for the 24 VDC input power.
- Houses the voltage regulators that provide 12 and 5 VDC for system operation.
- Houses circuitry and connection points for the relay services and music-on-hold (MOH).
- Houses the external page amplifier.

MCAU/AMMU:
The AMMU is required and mounts directly on the MCAU to form a single unit. All system control functions are performed by the single chip microprocessor located on the MCAU. The system program stored in ROM, RAM for system operations and battery-protected RAM for system data storage are located on the AMMU.

CRDU:
This optional PCB provides the additional memory capacity required for the Automatic Dialing-Station feature. The RAM containing the additional memory capacity is battery-protected. The CRDU mounts directly on the MCBU and/or MDSU. A maximum of two CRDUs are used in STRATA XII, while STRATA XX may use as many as three.

MCBU:
Contains a microprocessor and serves to off-load the main CPU by processing routine and repetitive data transmission tasks to and from the peripheral equipment. One MCBU is used in STRATA XII, while two are required in any STRATA XX system that is equipped with more than 32 stations.

MINU:
Generates system tones and provides the switching matrix for the delivery of tones for both paging and intercom connections (one per system).

MCOU (MF or DP):
An interface between the MKSU and the public telephone network or PBX lines. Depending upon local CO requirements, an MF or DP type of MCOU will be provided (MF for DTMF outpulsing, DP for rotary dial outpulsing). Each MCOU serves up to three CO/PBX lines.

MSTU:
An interface between the MKSU and EKTs, which includes a portion of the system's solid-state space division matrix. Each MSTU PCB services up to eight EKTs.

MXPU:
Contains the solid-state crosspoints that make up the remainder of the space division switching matrix. Each MXPU services up to 16 stations and provides access to 12 CO lines plus intercom or nine CO lines, depending upon its position in the system.

MDSU:
An optional PCB that serves as an interface between the DSS console(s) and the MKSU

(each system uses only one MDSU). The MDSU serves up to two fully functional DSS consoles and two DSS consoles which are used as Busy Lamp Field terminals only.

MSMU/SCNU:

The SCNU is required and mounts directly on the MSMU to form a single unit. This optional PCB serves as an interface between the MKSU and a printer or storage device used for the SMDR feature. The PCB is equipped with an RS 232C-type interface (one per system).

MOPU (MF/DP or DP):

An optional PCB that serves as an interface between the MKSU and conventional, single line telephones or off-premise extension (OPX) lines. An MOPU DP will operate with rotary dial telephones only. Either DTMF or rotary dial telephones can be used with an MOPU MF/DP PCB. Each MOPU services two extensions. A maximum of two MOPUs can be installed in STRATA XII and three in STRATA XX.

NOTE FOR DTMF TELEPHONES:

- *DTMF telephones cannot be Toll Restricted.*
- *SMDR cannot capture a telephone number dialed from a DTMF telephone; however, the remainder of the call details will be recorded.*

MPLU (MF or DP):

The MPLU PCB is a special assembly of a POPU PCB mounted on an MCOU to form a single unit. This optional PCB allows the bridging of a CO/PBX line (which appears in the STRATA system) with a conventional telephone. "OPL" telephones thus connected will then automatically cause a busy indication within the STRATA system and establish system privacy when initiating or answering a call on the dedicated CO line. Each MPLU serves up to three CO/PBX line/OPL combinations and replaces the MCOU PCB that would usually serve these lines. Maximum is one MPLU per system.

05.10 MPRU PCB Options

05.11 The MPRU houses several options that must be considered before it is installed in the MKSU, they are:

Background Music Relay Service:

An optional BR relay (K1 socket, Figure 9), if installed, provides a dry contact at the **BR** terminals on the front of the MPRU to control cut-off of BGM during an external page. The relay operates whenever an external page occurs. (A BR relay is required only when BGM is provided via a page amplifier mounted externally.)

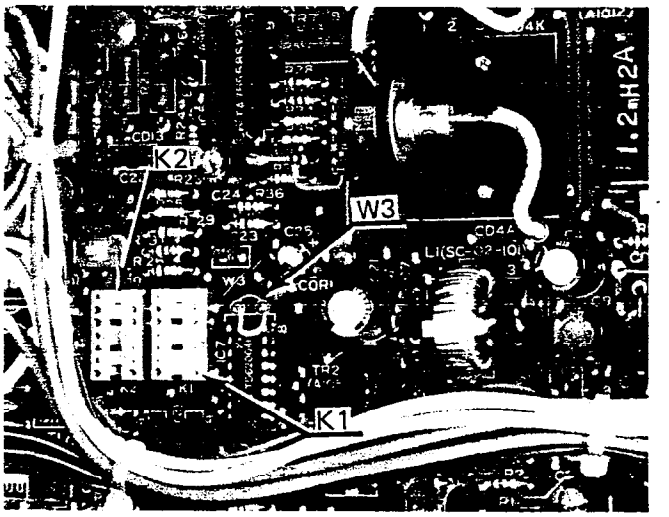

FIGURE 9

MPRU RELAY SOCKETS & W3 STRAP

Night Relay Service:

An optional NR relay (K2 socket, Figure 9), if installed, provides a dry contact at the **NR** terminals on the front of the MPRU. The **W3** strap option (Figure 9) allows the relay to function in one of two modes.

a) Answering Machine Control — if the **W3** strap remains intact, the relay is operated continuously when the system is in night service. This mode is intended for indirect control of an answering machine.

b) Night Bell Control — if the **W3** strap is cut, the relay pulses at a 1-sec. on, 3-sec. off rate whenever the system is in night transfer mode and an incoming call is ringing the system. This mode is intended to be used for indirect control of an external night bell.

External Page Impedance Selection:

The external page output appears at the terminals labeled 8/600 on the front of the MPRU. The output impedance can be selected

to be either 8 ohms or 600 ohms. If 8 ohms is selected, the output will be via a 3-watt amplifier on the MPRU, and the voice path will be one way. If 600 ohms is selected, an external PA amplifier or talkback amplifier is required and the internal voice path will be 2-way.

05.12 To equip either of the two relay service functions; obtain the optional relay from your Toshiba supplier and install it in the proper location on the MPRU, per Figure 10.

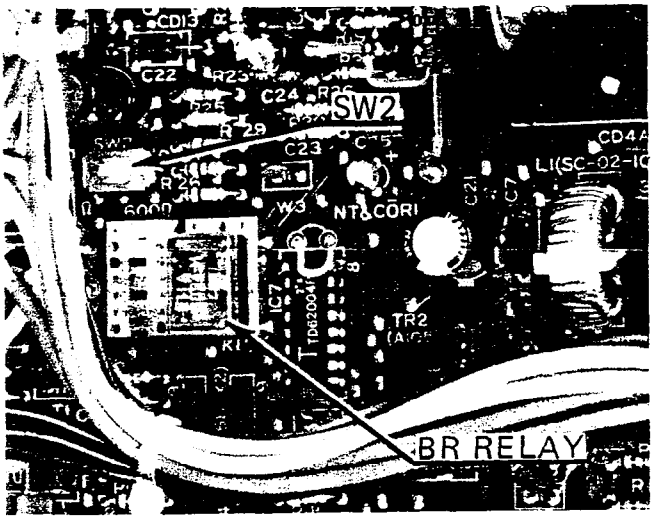

FIGURE 10
RELAY INSTALLED WITH SW2 SWITCH

05.13 External page impedance is selected with the **SW2** switch located adjacent to the relay sockets on the MPRU (Figure 10). Decide if 8- or 600-ohm impedance is required, then make the selection by positioning the **SW2** switch to "8" or "600", whichever is required. Figure 10 shows the switch in the 8-ohm position.

06 POWER CONNECTIONS

06.00 MPRU PCB Installation

06.01 The MPRU front panel provides the connection point for the 24 VDC input from the external power supply. Therefore, the MPRU must be installed first.

06.02 Install the MPRU PCB in its proper slot in the MKSU (Figures 15 & 16).

06.10 Power Connection

06.11 Plug the power supply into a 115 VAC outlet and check its output voltage to be sure it is between 23.2 and 28.2 VDC. If the voltage is not within these limits, replace the power supply before proceeding.

06.12 Disconnect the power supply from the 115 VAC outlet. Remove the plastic protective

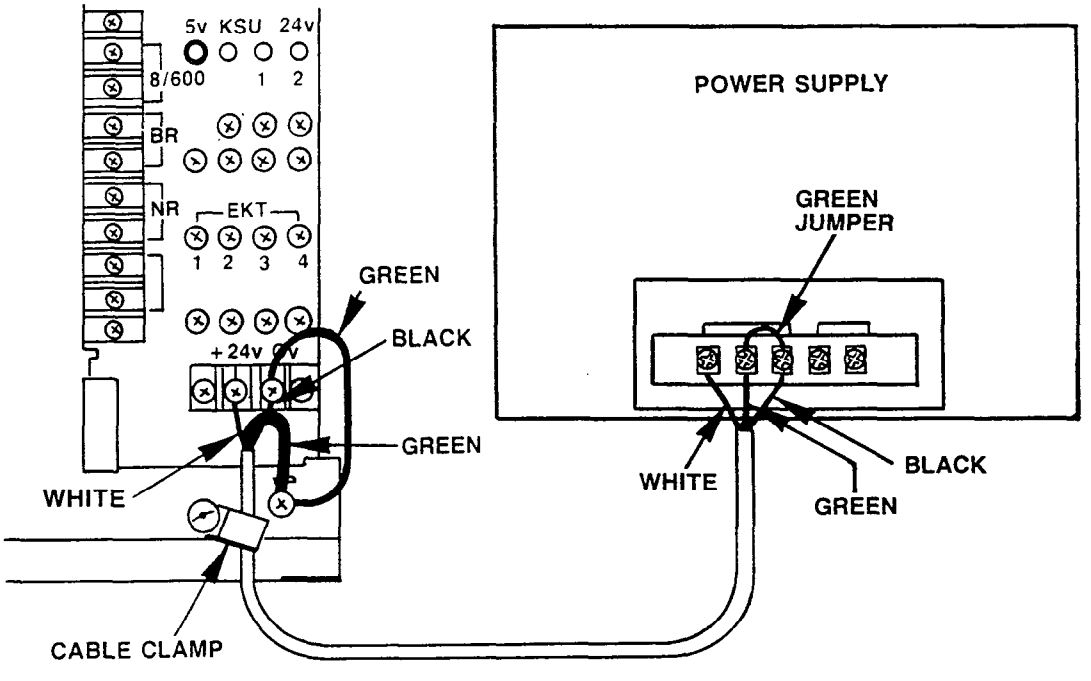

FIGURE 11—POWER SUPPLY WIRING—MKSU

cover from the power terminal strip on the MPRU, and, with the supplied cord, connect the power supply to the terminal strip and the MKSU frame ground (see Figure 11) in the following manner.

White:	"24V"
Black:	"OV"
Green:	"FG" on MKSU
	"E" on power supply

Make sure the wires are connected to matching terminals at each end. Secure the power cord to the MKSU with the plastic cable clamp that is provided.

06.13 Use the additional green wire packed with the system to bond the "E" and "OV" terminals on the power supply (see Figure 11).

06.14 For protection against static electricity, a green jumper wire is attached to the "FG" screw (refer to Figure 11). This wire must be connected to the "OV" terminal on the MPRU power strip. Reinstall the plastic protective cover on the power strip at this time.

06.15 Both Toshiba STRATA electronic key telephone systems require a solid earth ground on the "FG" terminal on the MKSU tray. Failure to provide such a ground may lead to confusing trouble symptoms in the system and, in extreme cases, circuit board failure. In most installations, within the continental United States, the ground provided by the "third wire ground" at the commercial power outlet will be satisfactory for all STRATA requirements. However, in a small percentage of installations this ground may be installed incorrectly. Therefore, prior to installing a system, the third wire ground must be tested for continuity by either measuring the resistance between the 3rd prong terminal (earth ground) and a metal cold water pipe (maximum: 1 ohm), or by using a commercially available earth ground indicator. If neither procedure is possible, then the test procedures outlined in Paragraph **06.16** should be performed.

WARNING!:

Hazardous voltage that may cause death or injury is exposed during the following test. Use great care when working with AC powerline voltage.

06.16 Test Procedure

1. Obtain a suitable voltmeter and set it for a possible reading of up to 250 VAC.
2. Connect the meter probes between the two main AC voltage points on the wall outlet. The reading obtained should be 90∿130 VAC.
3. Move one of the meter probes to the 3rd prong terminal (GND). Either the same reading or a reading of 0 volts should be obtained.
4. If the reading is OV, leave one probe on the GND terminal and move other probe to the 2nd voltage terminal. If a reading of OV is obtained on both voltage terminals, the outlet **is not** properly grounded. Omit Steps 5∿7 and proceed directly to Step 8.
5. If a reading of OV on one terminal and a reading of 90∿130 VAC on the other terminal is not obtained, the outlet **is not** properly grounded. Omit Steps 6 & 7 and proceed directly to Step 8.
6. If a reading of OV on one terminal and a reading of 90∿130 VAC on the other terminal is obtained, remove both probes from the outlet.
7. Set meter on the "OHMS/Rx1" scale, place one probe on the GND terminal and the other probe on the terminal which gave a reading of OV. A reading of less than 1 ohm should be obtained. If a reading of less than 1 ohm is not obtained, the outlet **is not** adequately grounded.
8. If the above tests show the outlet is improperly grounded, that condition should be corrected by a qualified electrician (per Article 250 of the National Electrical Code) before STRATA is connected.

06.17 Ensure that the power switch on the MPRU is **OFF**, then plug the power supply into the 115 VAC outlet and measure the voltage at the MPRU input terminals. Correct any problems before proceeding.

07 PCB INSTALLATION

07.00 Memory Protection

07.01 Mount the AMMU on the MCAU (Figure

12). Locate the SW3 battery strap on the AMMU (Figure 2) and connect the memory back-up battery. The strap is shown in the OFF or disconnected position. To connect the battery, remove and reinstall the strapping plug so that it bridges the center pin with the pin labeled ON.

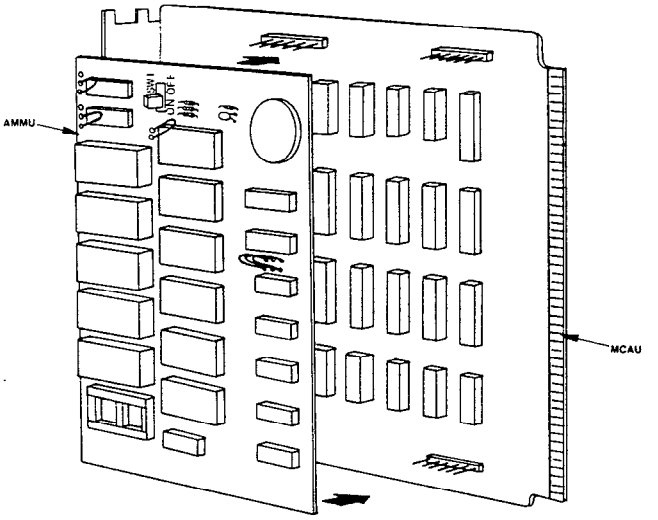

FIGURE 12—AMMU ONTO MCAU

07.02 Mount the CRDU(s) on the MCBU and MDSU (see Figures 13 and 14). Locate the SW1 battery strap on the CRDUs (Figure 1) and connect the memory back-up battery. The strap is shown in the OFF or disconnected position. To connect each battery, remove and reinstall the strapping plugs so that they bridge the center pin with the pin labeled ON. Ascertain the number and position(s) of CRDU PCBs required for your system per Table A—dedicated Automatic Dialing key codes reside at the lower end of the station register (that is: 10, 11, etc).

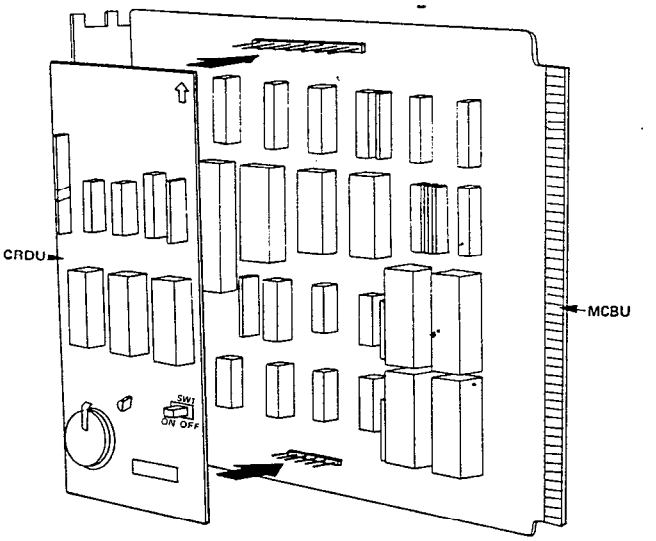

FIGURE 13—CRDU ON MCBU

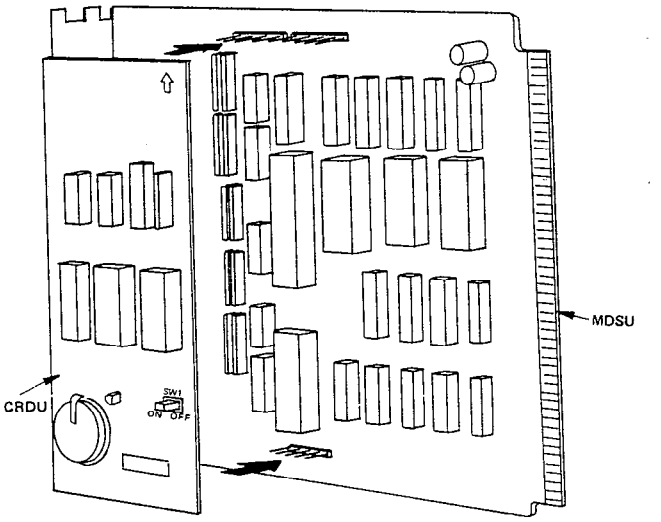

FIGURE 14—CRDU ON MDSU

TABLE A—CRDU POSITIONS

NOTE:
The quantity of Automatic Dialing numbers (STRATA XII & XX) provided the system and stations by the available options are listed in Table A. A CRDU is equipped on each PCB mentioned and the respective address codes are indicated in parenthesis.

	None	MCBU #1	MDSU	MCBU #1 MDSU	MCBU #2	MCBU #1 MCBU #2	MCBU #1 MCBU #2 MDSU
System List	24 (60∿83)	40 (60∿99)	24 (60∿83)	40 (60∿99)	24 (60∿83)	40 (60∿99)	40 (60∿99)
Stations 10∿46*	—	20 (10∿29)	20 (30∿49)	40 (10∿49)	—	20 (10∿29)	40 (10∿49)
Stations 47∿65	—	—	—	—	40 (10∿49)	40 (10∿49)	40 (10∿49)

**Stations 10∿41 for STRATA XII.*

07.10 PCB Installation Sequence

07.11 Install the MCAU/AMMU and MCBU PCBs in their correct MKSU positions (Figures 15 and 16).

07.12 Install the MINU in the correct MKSU position (Figures 15 and 16).

07.13 Install the appropriate number of MXPU PCBs (Figures 15 and 16).

a) For STRATA XII; install #1 MXPU for 16 or less stations (for MSTU #1, 2), add #2 MXPU for more than 16 stations (for MSTU #3, 4).

b) For STRATA XX; select the number and positions of the MXPU PCBs required for your system per Table B.

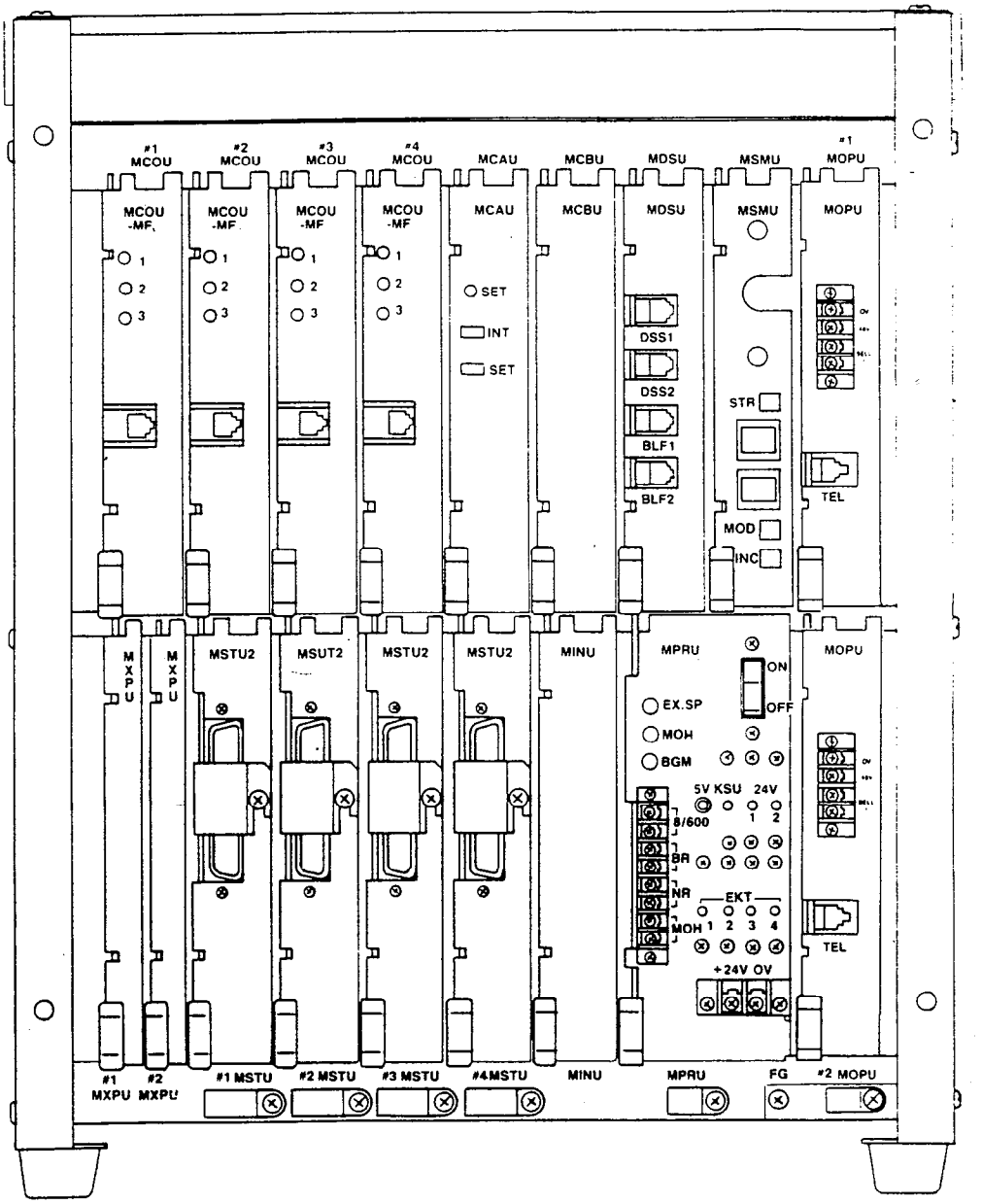

FIGURE 15—PCBs IN MKSU (STRATA XII)

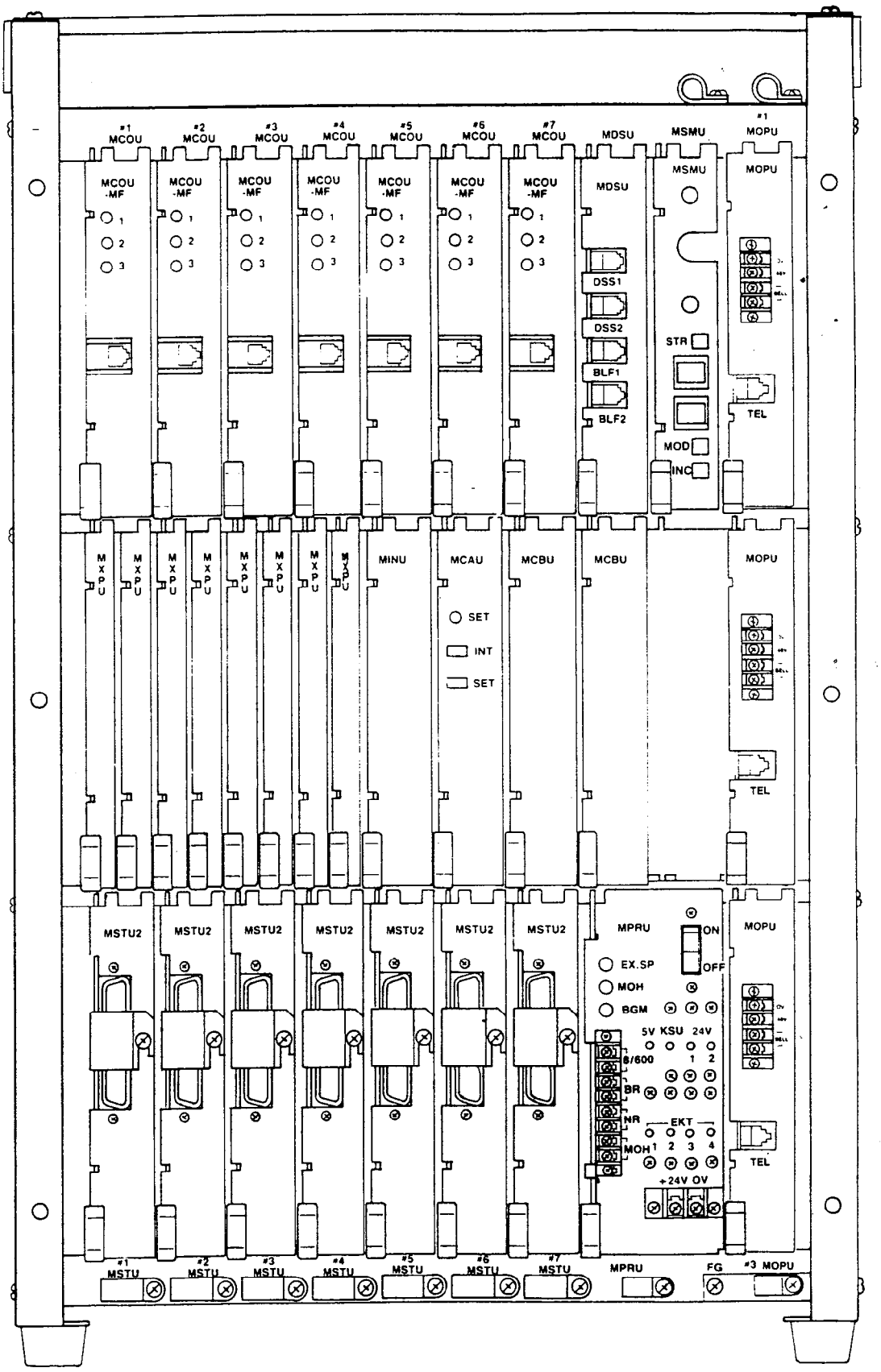

FIGURE 16—PCBs IN MKSU (STRATA XX)

ONLY FOR

TABLE B
MXPU POSITIONS

Stations in the system	MSTU equipped	Up to 12 CO/PBX lines & 4 intercoms	13 to 21 CO/PBX lines & 6 intercoms
10 ~25	1, 2	#1	#1, 2
10 ~41	1~4	#1, 3	#1~4
10 ~57	1~6	# 1, 3, 5	#1~6
10 ~65	1~8	#1, 3, 5, 7	#1~8

07.14 Follow the position arrangements indicated in Figures 15 and 16, and install the required MSTU PCBs.

a) STRATA XII & XX:
#1 MSTU serves stations 10~17
#2 MSTU serves stations 18~25
#3 MSTU serves stations 26~33
#4 MSTU serves stations 34~41

b) STRATA XX:
#5 MSTU serves stations 42~49
#6 MSTU serves stations 50~57
#7 MSTU serves stations 58~65

07.15 Select the proper type of MCOU PCB (MF or DP) and install the required number in the positions shown in Figures 15 and 16.

a) STRATA XII & XX:
#1 MCOU serves CO lines 1~3
#2 MCOU serves CO lines 4~6
#3 MCOU serves CO lines 7~9
#4 MCOU serves CO lines 10~12

b) STRATA XX:
#5 MCOU serves CO lines 13~15
#6 MCOU serves CO lines 16~18
#7 MCOU serves CO lines 19~21

07.16 If the system is to be equipped with a DSS console, install an MDSU in the correct MKSU position (Figures 15 and 16).

07.17 If the system is to be equipped with the Off Premise Line (OPL) feature, an MPLU PCB must be used *in place of* an MCOU for the CO lines in question. An MPLU MF or MPLU DP should be chosen depending upon the serving central office. Each MPLU PCB serves three circuits. (Maximum is one MPLU per system.

07.20 MSMU Installation

07.21 If the system is to be equipped with Station Message Detail Recording (SMDR), an MSMU must be installed in the correct location per Figures 15 and 16. Install the MSMU as follows:

07.22 Locate the **SW1** battery strap on the MSMU (Figure 17) and connect the memory back-up battery. The strap is shown in the **OFF** position. To connect the battery, remove and reinstall the strapping plug so that it bridges the center pin with the pin labeled **ON**.

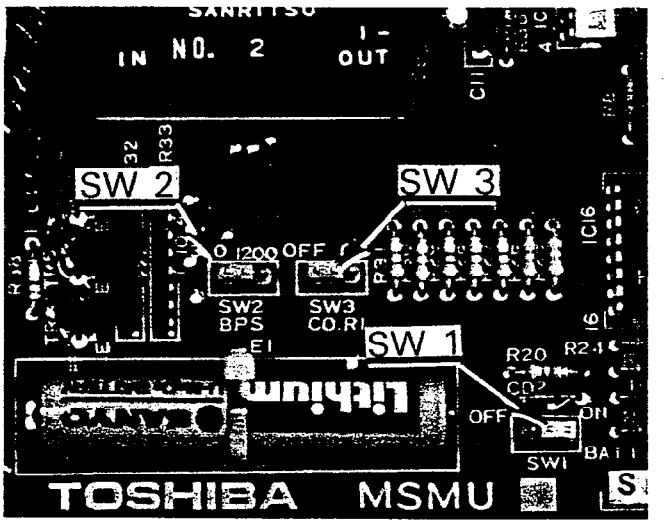

FIGURE 17—MSMU CONNECTION STRAPS

07.23 Select the data output speed using the **SW2** strap (Figure 17). The speed may be set at 300- or 1200-BPS by installing the strapping plug so that it bridges the center pin with the terminal labeled "300" or "1200". The **SW2** strap is shown in the 300-BPS position.

07.24 The SMDR feature will printout call records of both incoming and outgoing calls or

only outgoing calls. This option is selected using the SW3 strap (Figure 17). Installing the strapping plug so that it bridges the center pin with the terminal labeled OFF will cause both incoming and outgoing calls to be recorded. The SW3 strap is shown in the ON position, which selects outgoing calls only.

07.25 The RS 232C connector is located *behind* the metal faceplate of the MSMU, making it necessary to connect the printer cable *before* the PCB is installed in the MKSU. Secure the printer connector using the two screw holes provided on the PCB connector (Figure 18).

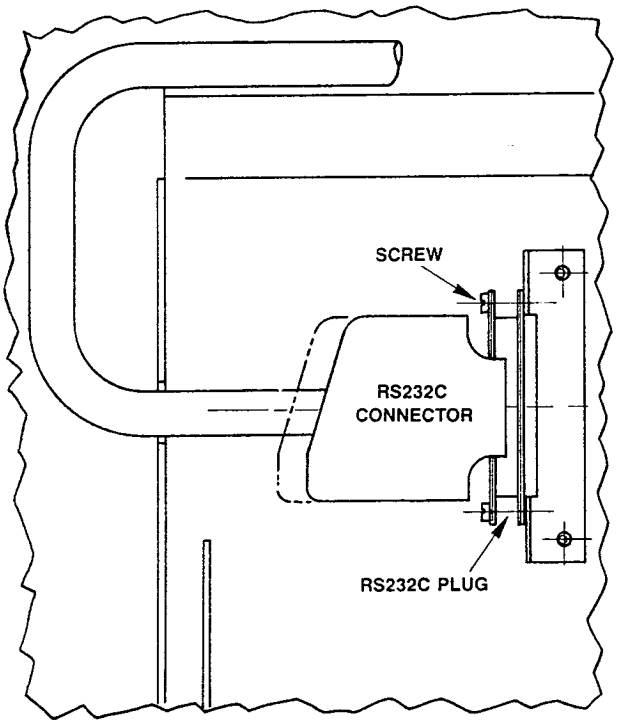

FIGURE 18—MSMU/RS 232C CONNECTOR

07.26 Install the MSMU into the MKSU.

07.30 MOPU Installation

07.31 If the system is to be equipped with conventional telephones or OPX extensions, MOPU PCBs are required; refer to Figures 15 and 16 for proper locations.

a) STRATA XII & XX
#1 MOPU serves stations 20 and 21
#2 MOPU serves stations 22 and 23

b) STRATA XX:
#3 MOPU serves stations 24 and 25

NOTE:
MSTU #2 ***must*** *be installed, but EKTs* ***cannot be*** *installed at the equivalent station numbers when an MOPU PCB is installed.*

07.32 Choose the appropriate type of MOPU PCB (MF/DP or DP). If MF/DP, make sure the SW1 and SW2 strapping plugs (Figure 19) are in the correct strapping position to match the type of telephones being used. Position each plug so that the center pin is strapped to the pin marked either MF or DP. See Section 100-020-300, *System Programming,* for further information.

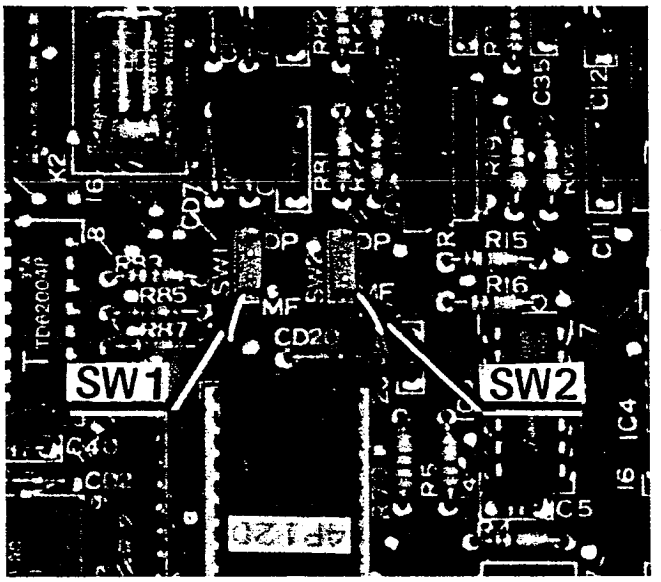

FIGURE 19—MOPU CONNECTING STRAPS

07.33 Install the required number of MOPU PCBs.

07.34 For correct cabling information, refer to Paragraph 08.60.

08 CABLE CONNECTIONS

08.00 System Cable Configuration

08.01 The system (Figure 20) consists of an MKSU, power supply and up to 32 (STRATA XII) or 56 (STRATA XX) electronic key telephones (EKTs). All connections between the MKSU and EKTs are made via a customer-provided main distribution frame (MDF). Using modular line cords, the CO lines are then connected between the MCOU PCBs and the telephone company-provided RJ-25C jacks. An external tuner

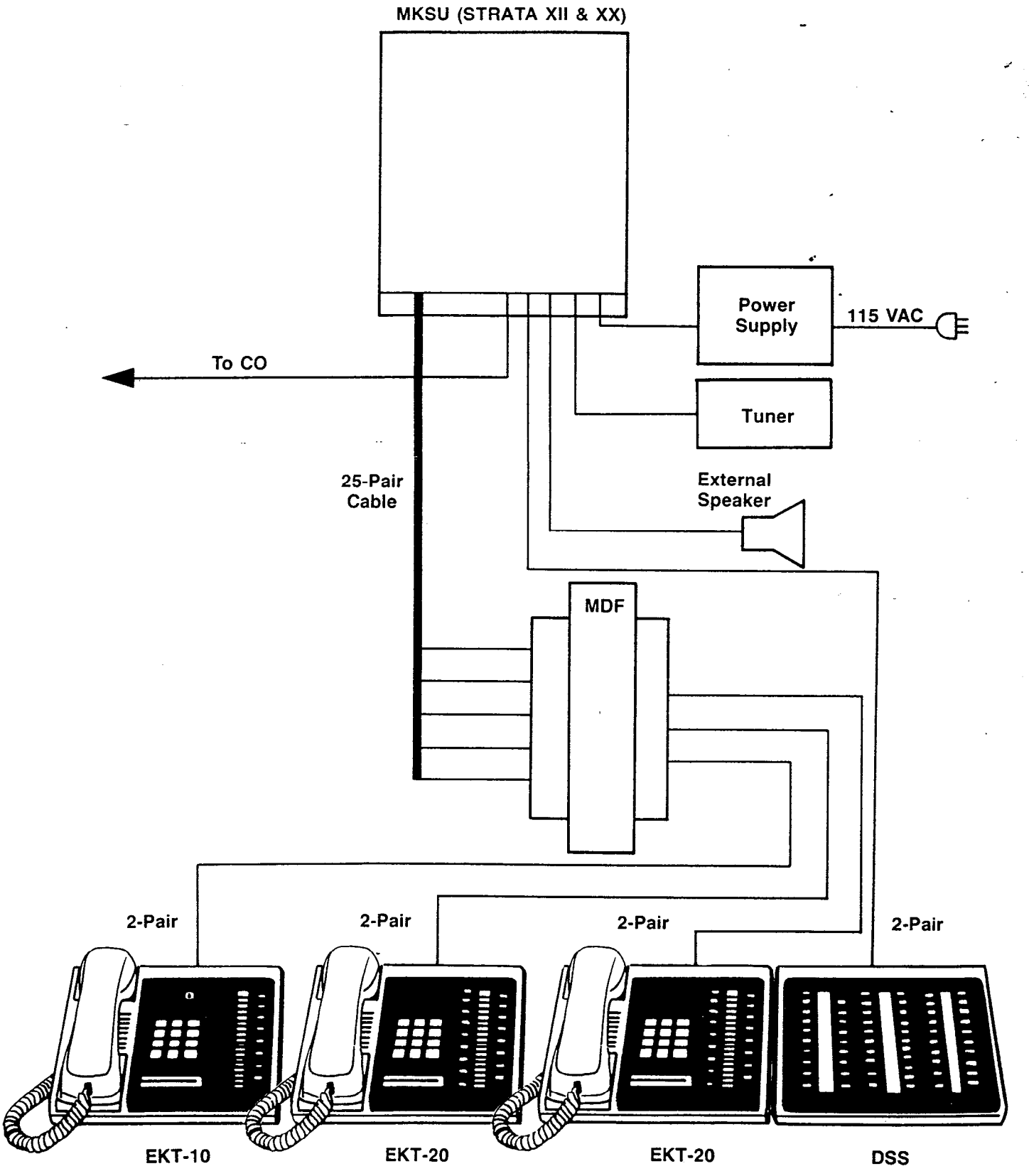

FIGURE 20—SYSTEM DIAGRAM

(or equivalent) is required if the music-on-hold feature is utilized.

08.10 Main Distribution Frame (MDF) Configuration

08.11 Use one split connection block for each group of eight stations; 66MI-50 split connection blocks are recommended for use in the STRATA main distribution frame (MDF).

08.12 A 25-pair male-amphenol-ended cable is connected directly to the front of each MSTU and fastened with the provided metal bracket (Figure 21).

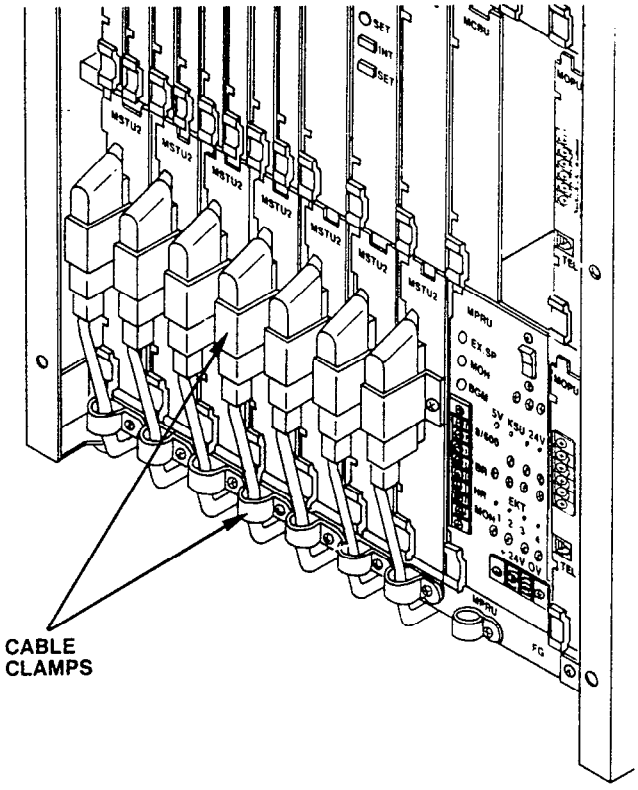

FIGURE 21—MKSU CABLE CLAMPING

08.13 Secure the cables to the bottom of the MKSU shelf (Figure 21) with the provided plastic cable clamps. Route the cables under the MKSU and toward the rear, as shown in Figure 22.

08.14 Refer to Figure 23, and route the cable from #1 MSTU (stations 10∿17) to Block 1, cable from #2 MSTU (stations 18∿25) to Block 2, etc.

08.15 Use the industry-standard color code sequence and terminate the cables on the MDF

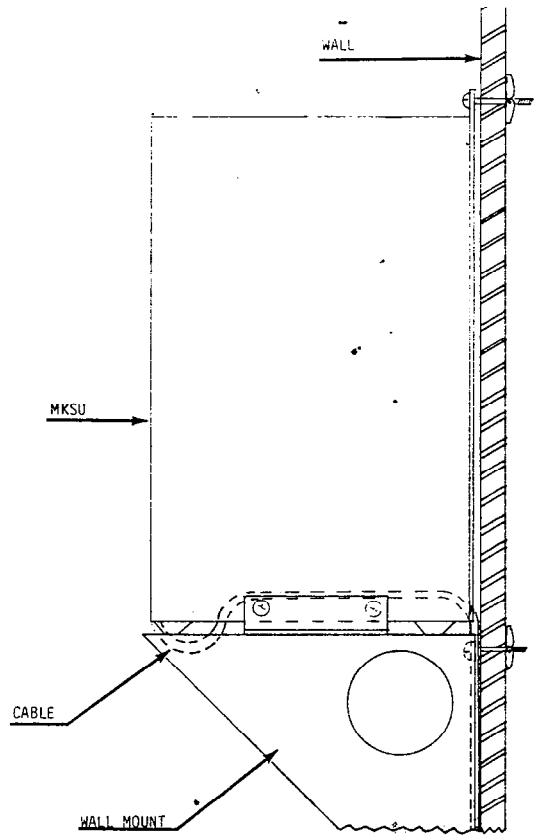

FIGURE 22—MKSU CABLE ROUTING

blocks as shown in Figure 23. (Use one side of each block for each cable.) Figure 23 is generic, in that it shows the basic diagram for each MSTU. Use Tables C and D for correct cross-connect data for all stations in both systems.

NOTE:
The remaining portion of the split block is not used.

08.20 Station Cable Connections

08.21 Terminate the individual 2-pair station cables consecutively on each MDF block, and attach them to the side opposite the MSTU cable. Use bridging clips to connect the MSTU cable pairs to the station cable pairs.

08.22 The cables used for station wiring should be twisted pair.

08.23 The overall length of the cable run must not exceed 1000 ft. (305 m) for 24 AWG wire.

IMPORTANT:
When installing station cable, do not run

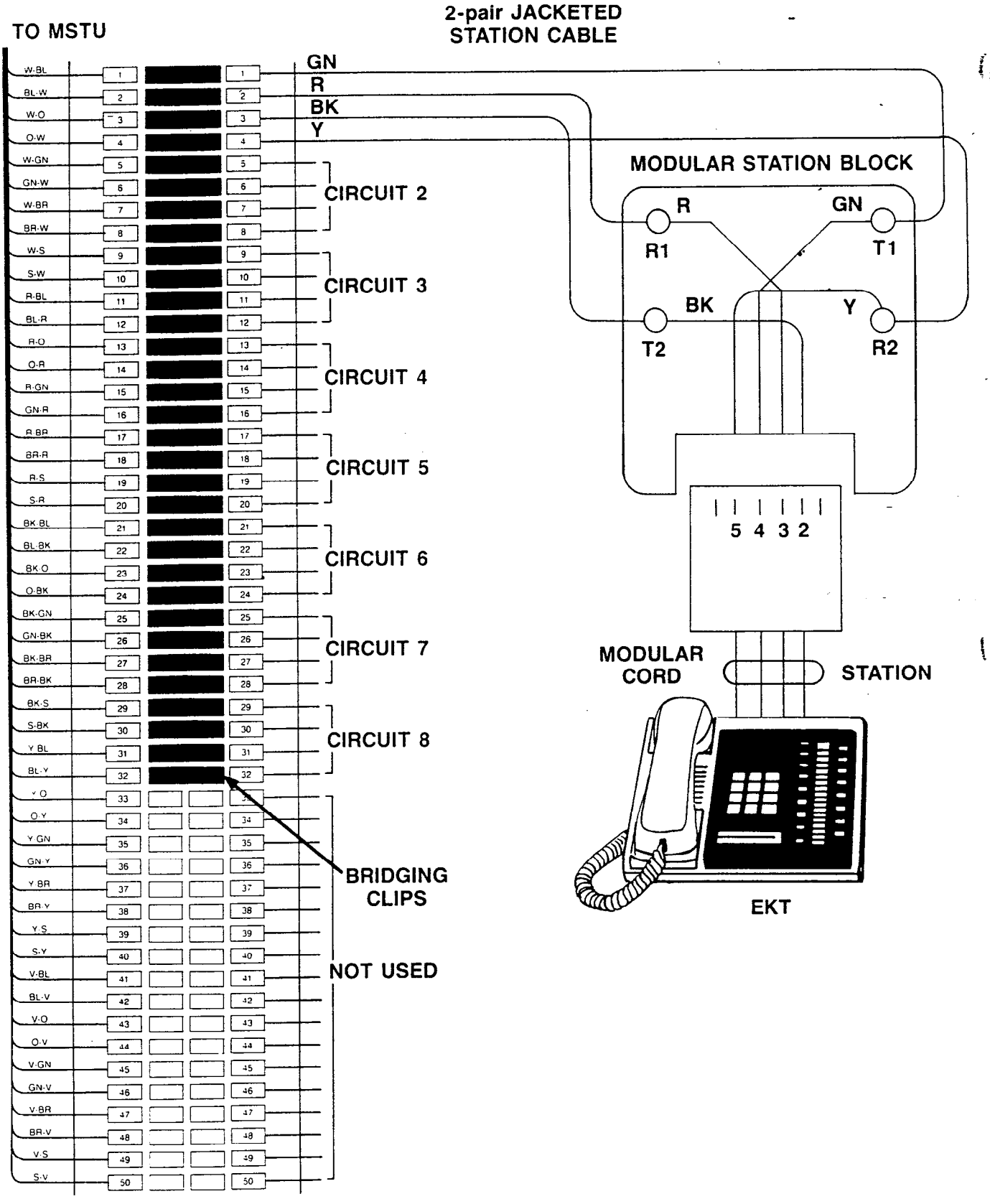

FIGURE 23—MDF/EKT WIRING

parallel to and within 3 ft. of an AC power line. Such power lines should be crossed at right angles (90°) only.

08.24 At the station locations, terminate the station cable in a conventional 4- or 6-conductor modular station connector to accommodate the modular line cord from the EKT. The standard modular EKT cord length is 7 ft., while the maximum allowed length is 25 ft.

08.25 Figure 23 shows the EKT wiring arrangement.

08.26 Various manufacturers of modular station blocks have employed different color codes to indicate the sequence of pairs in their blocks. However, the color code most commonly used is shown in Figure 23. Verify the configuration of your modular blocks before connecting the station cables.

TABLE C

STRATA XII & XX CROSS-CONNECT REFERENCE DATA

Color Code	Designation	Station Numbers MSTU #1	MSTU #2	MSTU #3	MSTU #4
W-Bl	T	10	18	26	34
Bl-W	R				
W-Or	DT				
Or-W	DR				
W-Gr	T	11	19	27	35
Gr-W	R				
W-Br	DT				
Br-W	DR				
W-S	T	12	20	28	36
S-W	R				
R-Bl	DT				
Bl-R	DR				
R-Or	T	13	21	29	37
Or-R	R				
R-Gr	DT				
Gr-R	DR				
R-Br	T	14	22	30	38
Br-R	R				
R-S	DT				
S-R	DR				
Bk-Bl	T	15	23	31	39
Bl-Bk	R				
Bk-Or	DT				
Or-Bk	DR				
Bk-Gr	T	16	24	32	40
Gr-Bk	R				
Bk-Br	DT				
Br-Bk	DR				
Bk-S	T	17	25	33	41
S-Bk	R				
Y-Bl	DT				
Bl-Y	DR				

NOTE:
The remaining portion of the split block is not used.

08.30 Intercom Code Assignment

08.31 Intercom codes are assigned permanently to specific MSTU cable appearances in STRATA. Make sure the station cables are connected to the proper terminals (see Tables C and D).

TABLE D

STRATA XX CROSS-CONNECT REFERENCE DATA

Color Code	Designation	Station Numbers MSTU #5	MSTU #6	MSTU #7
W-Bl	T	42	50	58
Bl-W	R			
W-Or	DT			
Or-W	DR			
W-Gr	T	43	51	59
Gr-W	R			
W-Br	DT			
Br-W	DR			
W-S	T	44	52	60
S-W	R			
R-Bl	DT			
Bl-R	DR			
R-Or	T	45	53	61
Or-R	R			
R-Gr	DT			
Gr-R	DR			
R-Br	T	46	54	62
Br-R	R			
R-S	DT			
S-R	DR			
Bk-Bl	T	47	55	63
Bl-Bk	R			
Bk-Or	DT			
Or-Bk	DR			
Bk-Gr	T	48	56	64
Gr-Bk	R			
Bk-Br	DT			
Br-Bk	DR			
Bk-S	T	49	57	65
S-Bk	R			
Y-Bl	DT			
Bl-Y	DR			

NOTE:
The remaining portion of the split block is not used.

08.40 CO Line Connection

08.41 The CO/PBX lines are introduced into the STRATA system via 6-wire modular line cords (no longer than 25 ft.) connected directly to a jack on the MCOU PCB. Each modular cord contains three lines. The opposite end of each cord then terminates directly into an RJ-25C jack (Figure 24).

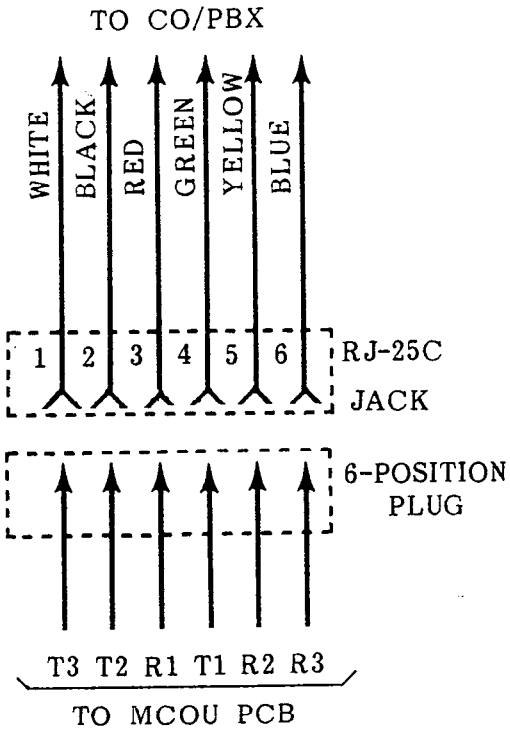

FIGURE 24—RJ25C WIRING

a) STRATA XII & XX:
#1 MCOU serves CO lines 1~3
#2 MCOU serves CO lines 4~6
#3 MCOU serves CO lines 7~9
#4 MCOU serves CO lines 10~12

b) STRATA XX:
#5 MCOU serves CO lines 13~15
#6 MCOU serves CO lines 16~18
#7 MCOU serves CO lines 19~21

08.42 The modular cords from the MCOU, MDSU, MOPU and MPLU PCBs are routed over the top of the PCB shelf and out through the rubber grommeted hole on the rear right or left side of the MKSU.

08.43 To install the modular cords, proceed as follows:

a) Loosen the four screws securing the MKSU top cover (Figure 25).

b) Slide the top cover slightly until the screws clear the keyholes, remove the top cover.

c) Using a razor blade or sharp knife, cut a vertical slit in the rubber grommet on the side of the MKSU.

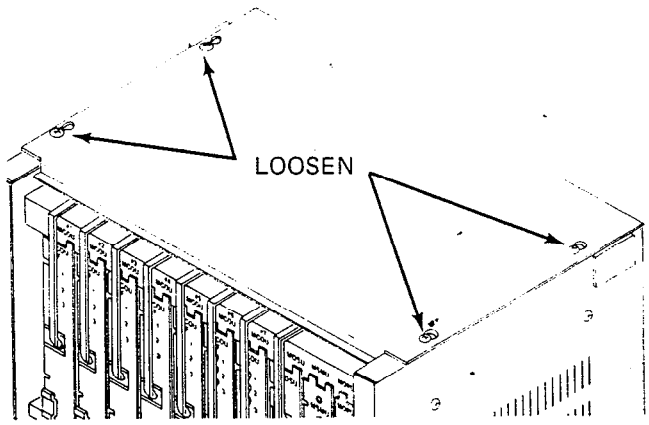

FIGURE 25—MKSU TOP COVER REMOVAL

d) Plug each cord into the proper PCB, secure it with the cable clamps located on the shelf top immediately above each PCB.

e) Route the cords across the top of the MKSU (Figure 26) and out through the rubber grommet to appropriate connector or MDF block.

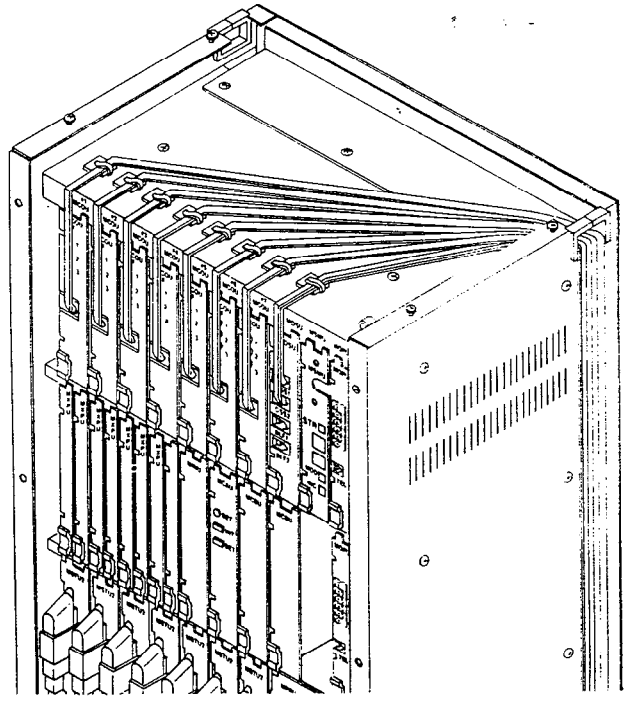

FIGURE 26

MKSU UPPER CABLE ROUTING

08.50 DSS/BLF Connection

08.51 The DSS/BLF consoles are connected to jacks on the MDSU PCB via modular cords.

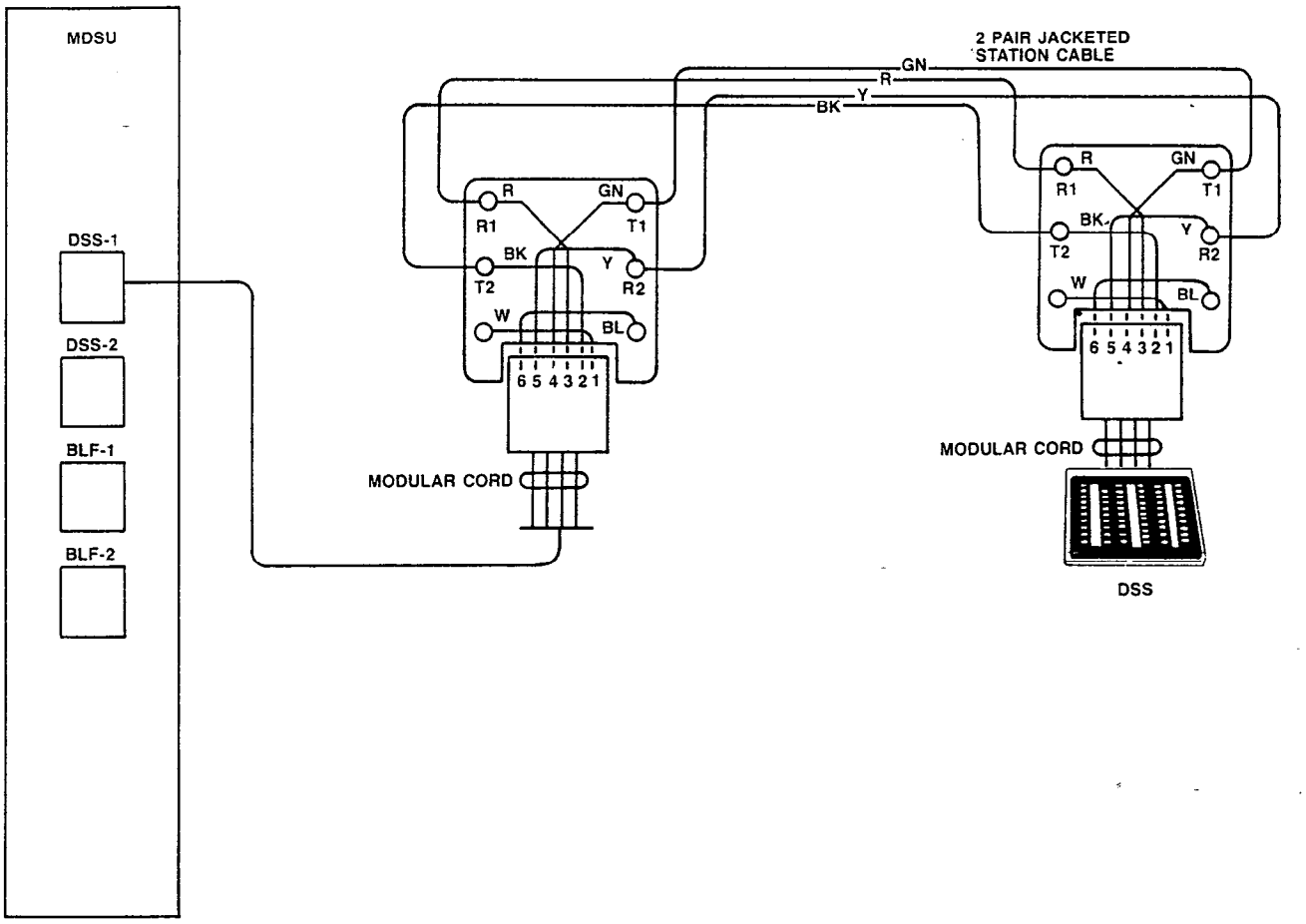

FIGURE 27—MDSU WIRING

A separate 4-wire cord is used for each console (Figure 27). The connectors on the MDSU are plainly marked as to their functions.

- DSS #1—will function with station 10
- DSS #2—will function with station 11
- BLF 1 & 2—may be used with any station

08.52 Route the modular cord out of the MKSU as in Paragraph **08.43.**

08.53 The cable used for DSS console wiring should be twisted pair.

08.54 The overall length of the cable run must not exceed 500 ft. (152.5 m) for 24 AWG wire.

IMPORTANT:
When installing DSS cable, do not run parallel to and within 3 ft. of an AC power line. Such power lines should be crossed at right angles (90°) only.

08.60 Off Premise Extension / Conventional Telephone Connections

08.61 Off premise/conventional single line telephone (OPX) connections are made via a 4-wire modular cord to the front of the MOPU PCB. One cord is required for each MOPU and serves two OPX connections. See Figure 28.

08.62 For an OPX telephone to function, customer-supplied external DC and ringing power supplies are required. Power supply specifications are as follows:

IMPORTANT FCC INFORMATION:
1. If the conventional telephone is to operate on-premise (that is, using only on-site wiring), any power source meeting the following requirements may be used.

2. If the telephone is to be used off-premise (that is, connected to a line provided by the telephone company), its power supply must have been tested, and then registered with the FCC as being suitable for the purpose. Contact your Toshiba supplier for details.

08.63 The DC voltage to be used should be chosen according to the wire gauge used and the loop length requirements as follows:

DTMF Telephone (MOPU MF/DP PCB):

Voltage	Loop Range
-48 VDC	1200 ohms
-24 VDC	680 ohms

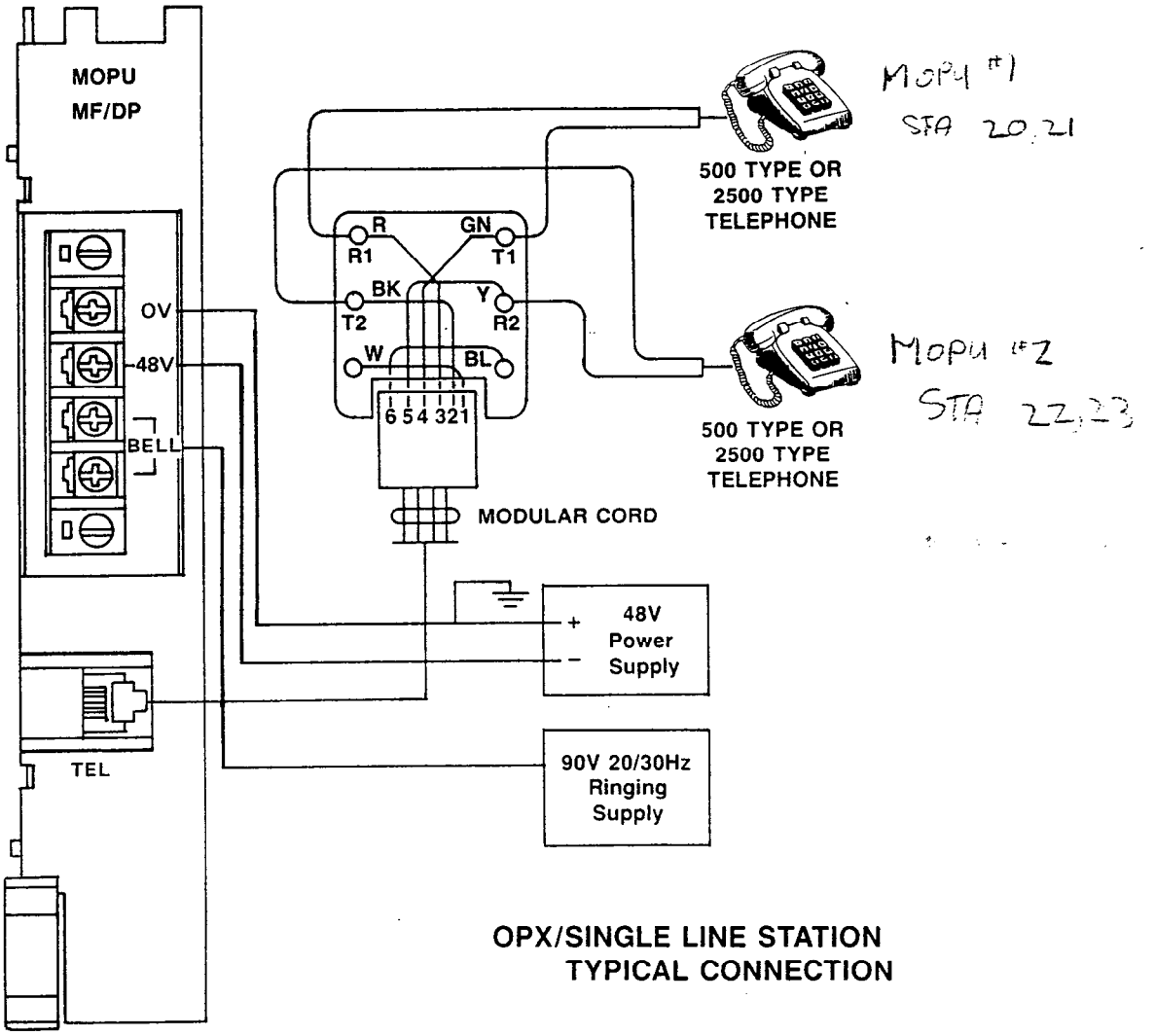

**OPX/SINGLE LINE STATION
TYPICAL CONNECTION**

FIGURE 28—MOPU WIRING

DC Supply:
Voltage: 24 VDC ~ 53 VDC
Ripple/noise: < 500 mV P-P
Current: 50mA per OPX telephone

Ringing Supply:
Voltage: 80 VAC ~ 110 VAC
Frequency: 20 ~ 30Hz
Power: According to ringers to be used (maximum of three ringer equivalents per OPX circuit)

Rotary Dial Telephone (MOPU DP or MF/DP PCB):

Voltage	Loop Range
-48 VDC	1700 ohms
-24 VDC	850 ohms

NOTE:
The OPX circuit requires a negative DC voltage; therefore, the main KSU power ***cannot*** *be used since it is a positive 24 volts.*

08.64 The DC and ringing power supplies are connected to the terminal strip on the front of MOPU #1 using standard station wire. If more than one MOPU is equipped, the power should be "daisy-chained" from MOPU #1 to MOPU #2, and, if equipped, to MOPU #3.

08.65 Station and power wires are routed out of the MKSU to the MDF and power supplies as described in Paragraph 08.43.

08.70 Off Premise Line (OPL) Connection

08.71 OPL connections are made via 6-wire modular cords to the front of the MPLU. Two cords are required; one is connected to the CO jack and serves up to three CO/PBX line connections, the second connects to the TEL jack and serves the three OPL stations provided by that PCB (Figure 29). The MPLU occupies an MCOU position. ~~Maximum:~~ one MPLU per system.

08.72 Route the cords out of the MKSU as described in Paragraph 08.43.

08.80 Station Message Detail Recording (SMDR) Connections.

08.81 The MSMU PCB is equipped with an RS232C connector to permit attachment of a printer or other recording device. An 80-column printer with an EIA RS232C serial interface operating at 300 or 1200 bps is required. Printer types known to be compatible with this system are:

Texas Instruments Model 743/745
OKI Data Model 82A

08.82 The data output is in a 7-bit ASC11 code with one start bit, one parity bit (even parity) and one stop bit.

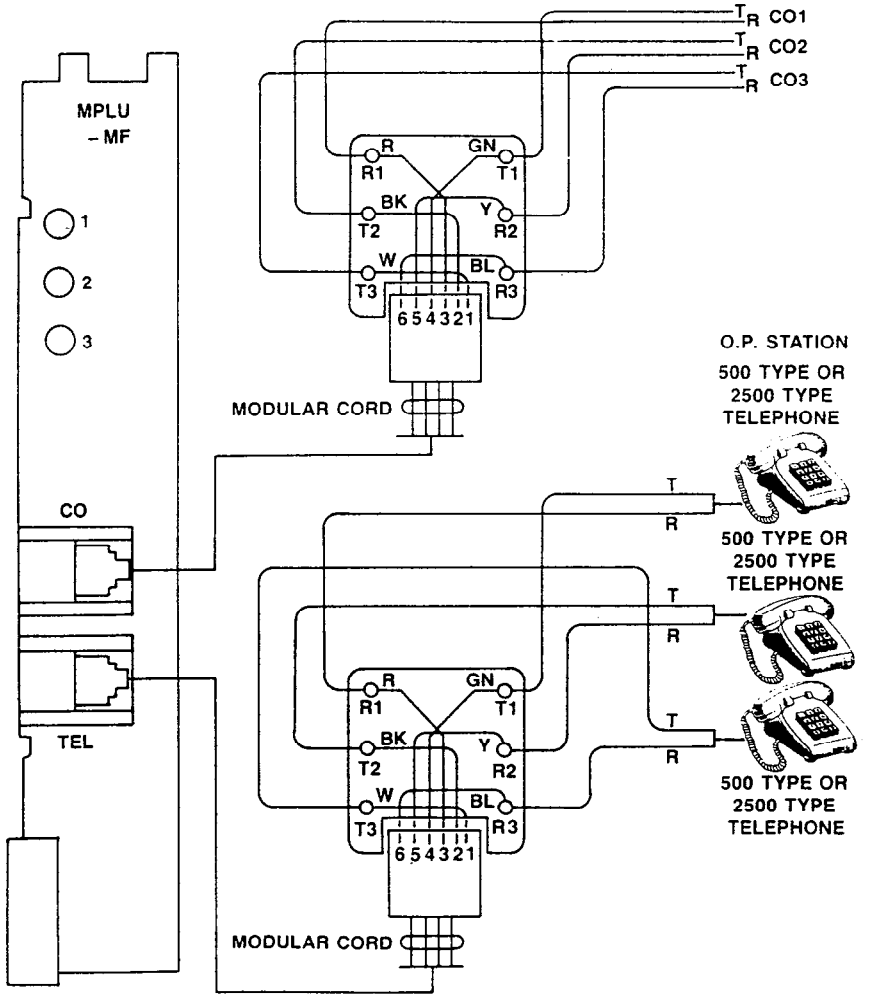

FIGURE 29—MPLU WIRING

08.83 The pin assignments on the MSMU RS 232C jack are as follows:

Pin No.	Function
1	FG (frame ground)
3	RD (receive data)
6[1]	DSR (data set ready)
7	SG (signal ground)
8[1]	CD (carrier detect)
20[2]	DTR (data terminal ready)

NOTES:
1. Held to EIA "ON" by MSMU.
2. Input to MSMU from printer.

Figure 30 shows the detailed connections for the printers listed above.

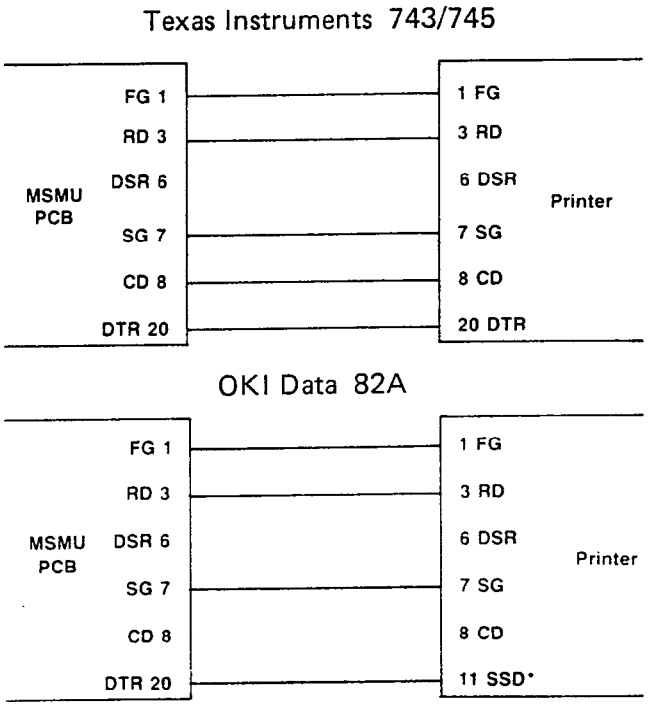

**Supervisory Send Data—cable modification required.*

FIGURE 30—MSMU-TO-PRINTER CABLING

08.84 Verify that (a) the output cable is connected to the PCB, (b) the battery strap in ON, and (c) the data speed and incoming/outgoing call options are selected per Paragraph **07.20.**

08.85 Route the printer cable out of the MKSU per Paragraph **08.43** and connect it to the printer or recording device.

09 ELECTRONIC KEY TELEPHONE INFORMATION

09.00 General

09.01 Three different Electronic Key Telephones (EKTs) may be used in either STRATA system. All three EKTs are equipped with four permanently dedicated keys and either 10 or 20 feature keys. Because of the number of these feature keys these EKTs are known as a 20-key EKT, a 10-key EKT and a 10-key Busy Lamp Field (BLF) EKT.

09.02 The 20-key EKT, Figure 31, measures:

Height: 4.0 inches (102 mm)
Width: 8.8 inches (224 mm)
Depth: 9.1 inches (230 mm)

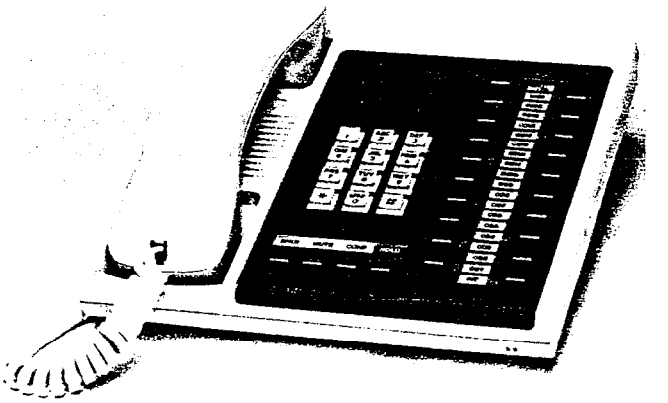

FIGURE 31—20-key EKT

and is equipped with 24 line and feature keys in addition to its push-button dial pad. In initialized mode, seventeen of the keys are utilized for central office/PBX lines, one for intercom access, and the remaining six keys are used for feature operation. System software assignments permit some assignment variations to the CO/PBX keys to facilitate tenant service and private lines, and to allow unused keys to be used for automatic dialing.

09.03 Software assignment permits the 10-key EKT (Figure 32), having the same dimensions as the 20-key EKT, to be alternately assigned to any station (with the exception of station 17). This 10-key EKT has full access to seven CO/PBX lines and can receive transferred calls on the other lines.

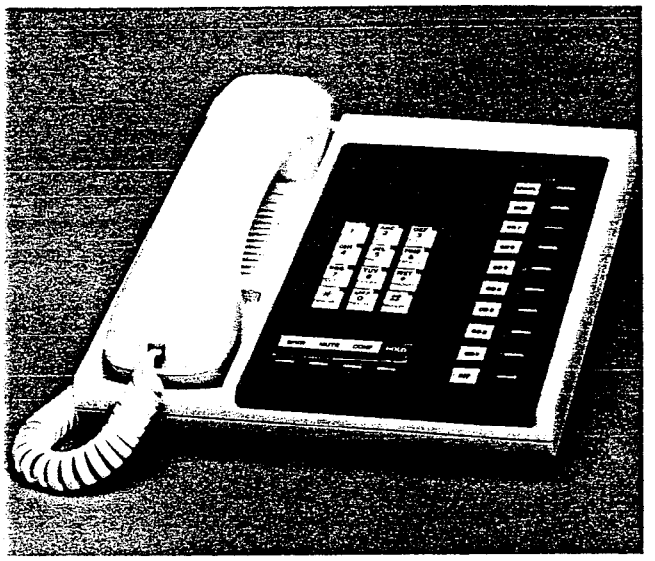

FIGURE 32—10-key EKT

09.04 An optional 10-key BLF EKT may be assigned via software at up to 15 positions (stations 10 through 25, except #17, only). This EKT has the same dimensions and key features as the 10-key.

09.05 See Program 4XX in Section 100-020-300, *Programming,* for inputting information concerning the various EKTs. The system *must* be told which type of EKT is at each station and what key assignment is required. (Station 17 must be equipped with a 20-key EKT.)

09.06 All EKTs feature modular handset cords and are connected to the system via four-conductor modular line cords.

09.10 **EKT Wall Mounting**

09.11 An optional handset hanger kit is required to convert either type of EKT for wall mounting. The EKT may be mounted on a wall or any other flat, vertical surface to which the base can be secured.

09.12 When selecting the mounting site, consider the EKT weight and the additional stresses to which the EKT will be subjected.

09.13 Mounting screws or mollies, appropriate for the surface on which the EKT is to be secured, must be provided by the installer.

09.14 Locking tabs secure the EKT's base. The direction in which the base is attached to the EKT determines whether it will be a desk or wall unit (it is factory-configured as a desk unit). Disengage the locking tabs by pushing downward on the base (Figure 33).

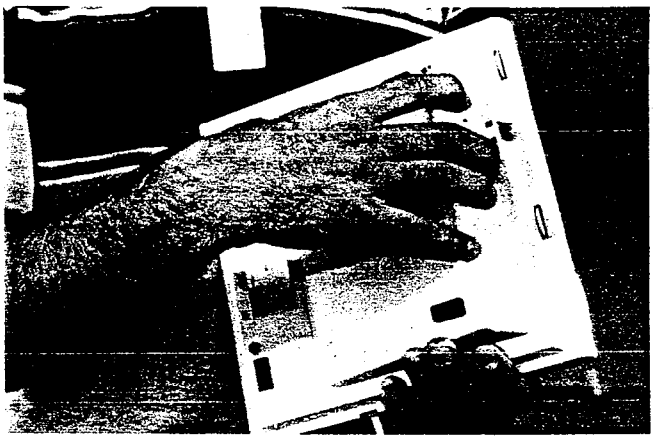

FIGURE 33—REMOVING EKT BASE

09.15 Refer to Figure 34, choose which of the knockouts are appropriate for the tail cord route, and then cut them.

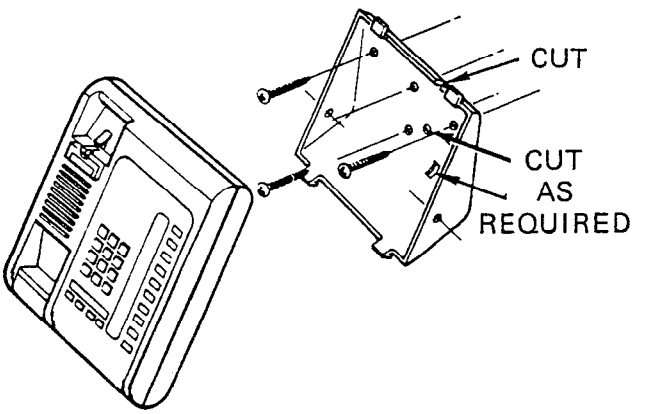

FIGURE 34—EKT WIRE ACCESS

09.16 Secure the base to the desired wall site. Use a spirit level and make certain the top of the base is level and that the deeper portion is down.

09.17 Route the tail cord through the holes in the base and secure the EKT (Figure 35).

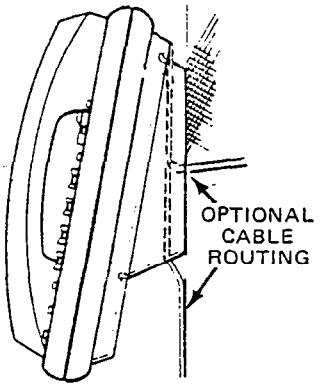

FIGURE 35—EKT WIRE ROUTING

09.20 **Converting the EKT**

09.21 Refer to Figure 36, the optional handset hanger kit (P/N HWMA, available from your Toshiba supplier) must be used whenever the EKT is wall-mounted.

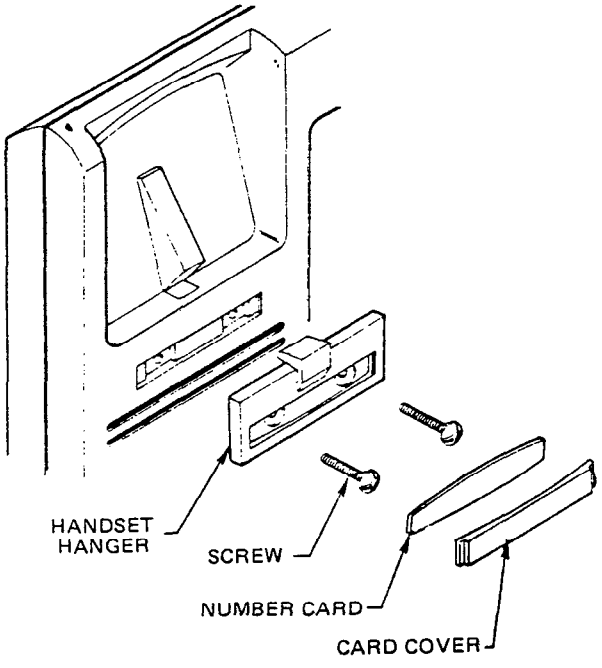

FIGURE 36—HANDSET HANGER KIT

09.22 Remove the card cover by inserting a paper clip in the hole at one end. Bend the cover up and remove it and the number card.

09.23 Install the handset hanger into place and tighten the screws. Reinstall the number card and card cover.

09.24 An optional 13-ft. handset cord is available from your Toshiba supplier, and it is suggested that this cord be used when wall-mounting an EKT.

09.30 EKT Connections

09.31 Connect the appropriate length line cord to the modular connector, route the cord to the EKT and connect to the EKT modular jack. Test the EKT as per Paragraph 11.00.

10 SYSTEM POWER-UP INITIALIZE

10.01 STRATA has a list of standard system data assignments stored in ROM that can be entered anytime by performing the initialize sequence outlined below. The system must be initialized when it is first installed or whenever the MCAU PCB is changed. This will allow the system to be tested and any faults to be corrected before time is spent on programming.

NOTE:
Do not initialize if using a preprogrammed, battery-protected AMMU.

10.02 Refer to Figure 37 and verify that the battery on the AMMU is connected to ensure that data changes entered after initialization will not be lost due to power failure.

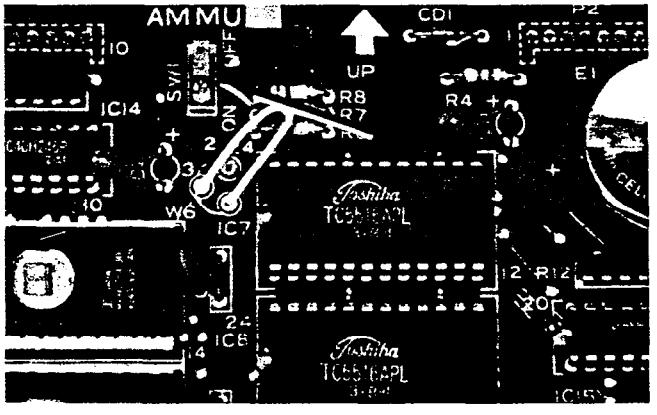

FIGURE 37—AMMU BATTERY STRAP

NOTE:
The SET LED will not function if the AMMU battery is not connected.

10.03 To initialize the system data memory, refer to Figures 38 and 39 and perform the following steps:

a) Place the power switch on the MPRU PCB in the ON position.

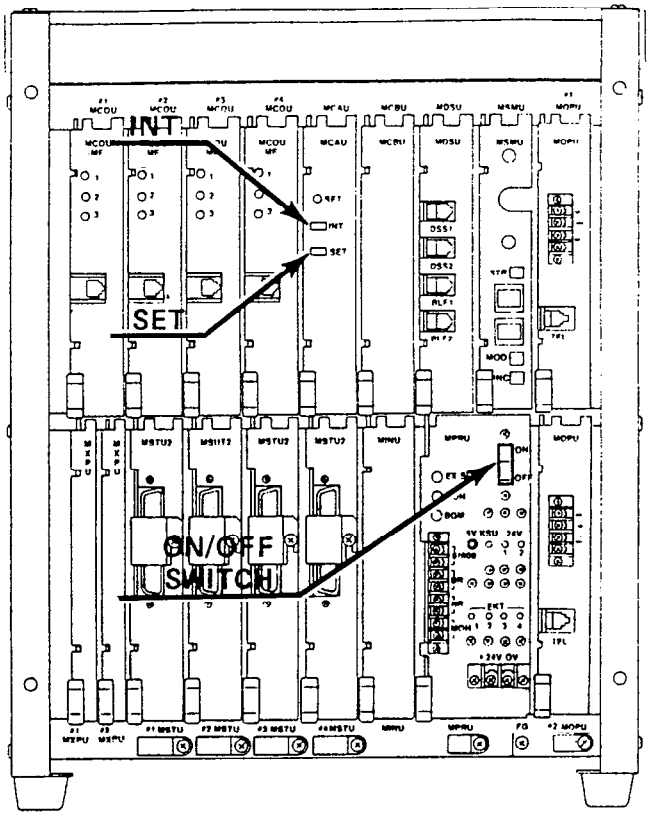

FIGURE 38—SYSTEM INITIALIZING

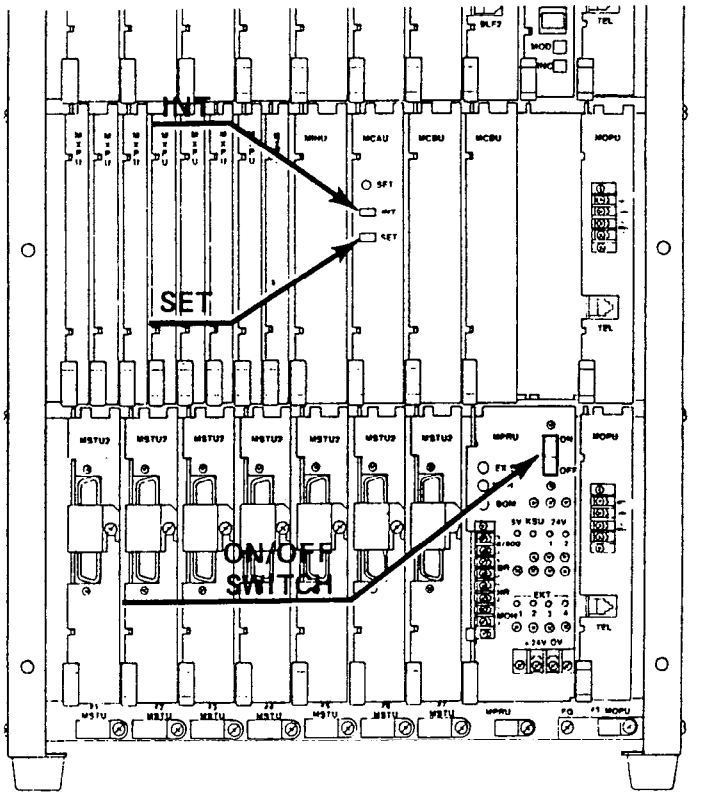

FIGURE 39—SYSTEM INITIALIZING

b) Depress the INT switch on the MCAU, and hold it in.

c) Depress the SET switch and allow it to lock.
- Set LED ON

d) Depress and release the SET switch again.
- Set LED OFF

e) Release the INT switch.

f) Cycle MPRU power switch OFF and ON.

10.10 Clearing Automatic Dialing

10.11 The Automatic Dialing memory will contain random numbers when the system is powered up initially. To clear the memory; therefore preventing meaningless numbers from being dialed, proceed as follows:

NOTE:
The use of two or more CRDU PCBs in different locations will cause several different configurations of Automatic Dialing numbers. See Table A for further information on CRDU locations.

10.12 To clear the standard Automatic Dial-System memory (24 numbers):

1) Lock in the SET switch on the MCAU:
- The MCAU LED and MW/FL LED on station 17 will go on.

2) Depress [SPKR] key on station 17:
- SPKR LED will light steadily.

3) Dial [#] [*] [*] on dial pad:
- SPKR LED will flash continuously.

4) Depress the following keys:
- [INT] [CO 4] [CO 8] [CO 12] —the corresponding LEDs will light.

5) Depress the [HOLD] key:
- All station 17 LEDs (except MW/FL) will go off.

6) Release the SET switch on the MCAU:
- The MCAU LED and MW/FL LED on station 17 will go off.

10.13 To clear first optional Automatic Dialing memory (CRDU on MCBU #1):

1) Lock in the SET switch on the MCAU:
   - The MCAU LED and MW/FL LED on station 17 will go on.

2) Depress [SPKR] key on station 17:
   - SPKR LED will light steadily.

3) Dial [#] [*] [1] on dial pad:
   - SPKR LED will flash continuously.

4) Depress the following keys:
   - [CO 1] [CO 5] [CO 9] [CO 13] —the corresponding LEDs will light.

5) Depress the [HOLD] key:
   - All station 17 LEDs (except MW/FL) will go off.

6) Release the SET switch on the MCAU:
   - The MCAU LED and MW/FL LED on station 17 will go off.

10.14 To clear second optional Automatic Dialing memory (CRDU on MDSU):

1) Lock in the SET switch on the MCAU:
   - The MCAU LED and MW/FL LED on station 17 will go on.

2) Depress [SPKR] key on station 17:
   - SPKR LED will light steadily.

3) Dial [#] [*] [2] on dial pad:
   - SPKR LED will flash continuously.

4) Depress the following keys:
   - [CO 2] [CO 6] [CO 10] [CO 14] —the corresponding LEDs will light.

5) Depress the [HOLD] key:
   - All station 17 LEDs (except MW/FL) will go off.

6) Release the SET switch on the MCAU:
   - The MCAU LED and MW/FL LED on station 17 will go off.

10.15 To clear third optional Automatic Dialing memory (CRDU on MCBU #2):

1) Lock in the SET switch on the MCAU:
   - The MCAU LED and MW/FL LED on station 17 will go on.

2) Depress [SPKR] key on station 17:
   - SPKR LED will light steadily.

3) Dial [#] [*] [3] on dial pad:
   - SPKR LED will flash continuously.

4) Depress the following keys:
   - [CO 3] [CO 7] [CO 11] [CO 15] —the corresponding LEDs will light.

5) Depress the [HOLD] key:
   - All station 17 LEDs (except MW/FL) will go off.

6) Release the SET switch on the MCAU:
   - The MCAU LED and MW/FL LED on station 17 will go off.

10.20 SMDR Real Time Clock Adjustment

10.21 One of the functions of the MSMU PCB is to provide a calendar and clock for showing time, date and duration of recorded calls. This clock and calendar must be set when the system is first placed into service.

10.22 The MSMU is equipped with a battery to protect the clock and calendar settings in event of a power failure. Ensure that the MSMU battery strap is in the ON position per paragraph 07.20.

10.23 The MSMU will automatically adjust for 30- and 28-day months and leap year.

10.24 The MSMU faceplate is equipped with three switches and two LED displays (Figure 40). Looking from top to bottom; the functions of the switches are as follows:

STR: Writes data into memory once it is properly displayed.

MOD: Selects items to be adjusted. Multiple depressions of the MOD switch will cause item *numbers* to be displayed sequentially by LED #1. The possible displays are:

Off
1 = year
2 = month
3 = day
4 = hour
5 = minute
6 = start

INC: Selects the data (hour, minute, day, etc.) for the item number selected by the MOD switch and displayed by LED #1. LED #2 displays data selected by the INC switch.

- Depressing the INC switch once increments data by 1.
- Depressing and holding the INC switch causes data to increase continuously until the INC switch is released.

FIGURE 40—MSMU FACEPLATE

10.25 To set clock and calendar:

1) Verify that the battery is connected on the MSMU (Figure 17).

2) Depress the MOD switch once.
   - LED #1 will display 1 (year)
   - LED #2 will display current data

3) Use the INC switch to correct data in LED #2 display.

4) Depress the MOD switch once.
   - LED #1 will display 2 (month)
   - LED #2 will display current data

5) Use the INC switch to correct data in LED #2 display.

6) Depress the MOD switch once.
   - LED #1 will display 3 (day)
   - LED #2 will display current data

7) Use the INC switch to correct data in LED #2 display.

8) Depress the MOD switch once.
   - LED #1 will display 4 (hour)
   - LED #2 will display current data

9) Use the INC switch to correct data in LED #2 display.

10) Depress the MOD switch once.
   - LED #1 will display 5 (minute)
   - LED #2 will display current data

11) Use the INC switch to correct data in LED #2 display.

12) Depress the MOD switch once.
   - LED #1 will display 6 (start)
   - LED #2 has no display

13) Slide STR switch to ON and then back to OFF.
   - LEDs will go off
   - Data is transferred to working memory and time keeping starts.

NOTE:
If LED #1 is changed to OFF before STR is operated, existing data will not be changed regardless of adjustments made in previous steps.

10.30 Program Listing

10.31 The MSMU has the capability to retrieve current customer data from memory and output it to the SMDR printer.

10.32 See Section 100-020-300, *Programming,* for printout method and format.

11 SYSTEM TEST PROCEDURES

11.00 EKT Functional Check

11.01 In order to verify basic system functions, and confirm the proper functioning of the EKT itself, perform the following test procedure at each station beginning with station 10.

11.02 With handset on-hook:

a) Depress the [INT] key:
   - INT LED: I-use flash

- SPKR LED: on steady
- Listen for intercom dial tone via EKT speaker

b) Adjust speaker volume with the volume control on the rear right side of the EKT.

c) Depress the [CO 1] key:
- CO 1 LED: I-use flash
- SPKR LED: on steady
- Listen for CO/PBX dial tone via EKT speaker

d) Dial any digit (2~9) on the dial pad and dial tone will stop.

e) Depress the [MW FL] key:
- Listen for circuit break followed by dial tone after approximately 2 seconds.

f) Depress each [CO] key in order on every EKT, the following should occur:
- CO LED: I-use flash
- SPKR LED: on steady
- Listen for CO/PBX dial tone via EKT speaker

NOTE:
If no CO/PBX facility is connected to a CO key, dial tone will not be heard but the LED is still functional.

g) Depress the [SPKR] key:
- SPKR LED: off
- EKT speaker: off

h) Depress the [DND] key:
- DND LED: on

i) Depress the [DND] key:
- DND LED: off

j) Depress the [CO 1] key:
- CO 1 LED: I-use flash
- SPKR LED: on
- Listen for CO/PBX dial tone via EKT speaker

k) Depress the [HOLD] key:
- CO 1 LED: I-hold flash
- Speaker: off (no dial tone)
- SPKR LED: off

l) Depress the [CO 1] key:
- CO 1 LED: I-use flash
- SPKR LED: on
- Listen for CO/PBX dial tone via EKT speaker

m) Depress the [CONF] key:
- CO 1 LED: Conference call flash rate
- Dial tone continues

n) Depress the [CO 1] and [SPKR] keys:
- CO 1 LED: off
- SPKR LED: off
- Dial tone: off

o) Call EKT from another station:
- Listen for voice via speaker after warning tone
- Called station INT LED: I-called flash

p) Dial [1] at calling station:
- Tone signalling heard via speaker

q) Adjust tone signalling volume with volume control on the rear left-hand side of the EKT being tested.

r) Depress the [INT] key:
- INT LED: I-use flash
- SPKR LED: on
- Listen for INT dial tone via EKT speaker

s) Lift handset:
- SPKR LED: off
- Speaker: off
- Listen for dial tone via handset receiver

t) Call another station and talk into the handset transmitter:
- Verify that your voice can be heard via called EKT speaker.

u) Hold down the [SPKR] key, and set the handset back on-hook:
- INT LED: I-use flash
- SPKR LED: on

v) Tap the EKT microphone and verify the sound can be heard via the speaker on the called EKT.

w) Depress the [MUTE] key while tapping the microphone and verify that the sound cannot be heard via called EKT speaker.

x) Depress the [SPKR] key:
- INT LED: off
- SPKR LED: off

11.03 This completes the station functional check; repeat the procedure for all stations in the system.

11.10 Off Premise Extension / Conventional Telephone Functional Check

11.11 Perform the following test procedure at each Off Premise Extension/Conventional Telephone (OPX) location:

a) Lift the OPX handset and listen for intercom dial tone.

b) Dial the number of another station:
- Dial tone will stop when the first digit is dialed.
- Ringing or voice paging will be heard at the called station.

c) Lift the handset at the called station:
- Ringing stops.

d) Verify that a 2-way voice connection exists between the OPX and the called station.

e) Go on-hook at both stations.

f) Lift the OPX handset and listen for intercom dial tone.

g) Dial [9] :
- An idle line, from the group defined by Program 09, will be siezed.
- Listen for CO dial tone.

h) Dial a test call:
- Verify that a 2-way voice connection is established.

i) Flash the hook-switch on the OPX and listen for intercom dial tone.

j) Dial the number of another station:
- Dial tone will stop when the first digit is dialed.
- Ringing or voice page will be heard at the called station.

k) Lift the handset at the called station:
- Ringing stops.

l) Verify that a 2-way voice connection exists between the OPX and the called station.

m) Flash the hook-switch on the OPX.

n) Verify that a 3-way conference is established.

o) Go on-hook at the OPX.

p) Verify that the CO line and called station are connected.

q) Go on-hook at the called station.

11.20 OPL Circuit Functional Check

11.21 Perform the following test procedure on each OPL/CO line pair:

a) Lift the OPL telephone handset and listen for CO dial tone.

b) Verify that the corresponding CO line LED lights on the system EKTs.

c) Dial a test call from the OPL telephone:
- Verify that a 2-way voice connection is established.

d) Depress the corresponding line key on an EKT:
- Verify that the privacy feature *prevents* access.

e) Go on-hook at OPL telephone.

f) Depress the OPL CO line key on an EKT and listen for CO dial tone.

g) Dial a test call from the EKT:
- Verify that a 2-way voice connection is established.

h) Lift the OPL telephone handset:
- Verify that a 3-way voice connection is established.

i) Go on-hook at both stations.

j) Make an incoming call to the OPL CO line:
- Ringing will be heard at the OPL telephone.
- Appropriate EKT(s) will ring.
- Appropriate EKT LED(s) will flash.

k) Lift the OPL telephone handset to answer the call:
- Ringing stops.
- EKT LED(s) light steadily.

- Verify that a 2-way voice connection is established.

l) Depress OPL CO line key on an EKT:
- Verify that the privacy feature *prevents* access.

m) Go on-hook at the OPL telephone.

n) Make another incoming call to the OPL CO line.

o) Answer the call using an EKT:
- Verify that a 2-way voice connection is established.

p) Lift the OPL telephone handset:
- Verify that a 3-way voice connection is established.

q) Go on-hook at both stations.

11.30 SMDR Feature Functional Check

11.31 Perform the following test to verify the proper functioning of the SMDR feature.

a) Connect the printer to the MSMU PCB.

b) Set data speed and select type of calls to be recorded per Paragraph 07.20.

c) Make an outgoing call from any EKT.

d) Enter an account code as follows:
- Dial access code ([*] [5] [0]).
- Dial the account code (6 digits).

e) Hang up after the call has been active for at least 10 seconds (calls of less than 10-sec. duration will not be recorded).
- The call record will be output to the printer in the format shown in Figure 41.

f) Take the printer "off-line" (DTR signal "off").

g) Make an outgoing call.

h) Hang up after the call has been active for at least 10 seconds.
- Call record will not be output.

i) Put the printer "on-line" (DTR signal "on").
- Call record will be output.

j) Make an incoming call to the system and delay answering it for several rings.

k) Answer the call.

l) Enter an account code as in step d.

m) Hang up:
- Call record will be output to the printer in the format shown in Figure 42.

MM/DD/YY

01	10	HH:MM	00:30;51	7305000	
02	14	HH:MM	00:02;39	8531212	123456
04	18	HH:MM	00:01;37	12135551212	654321
03	15	HH:MM	00:04;51	18002436161	
07	19	HH:MM	00:02;25	2731750	

FIGURE 41—SMDR EXAMPLE PRINTOUT (OUTGOING CALL RECORD)

MM/DD/YY

01	10	HH:MM	00:01;13	00;02	
02	14	HH:MM	00:02;30	00;04	
02	11	HH:MM	00:03;36	00;10	665544

FIGURE 42—SMDR EXAMPLE PRINTOUT (INCOMING CALL RECORD)

11.40 Feature Check

11.41 Verify that all system features function properly per Section 100-020-400, *Operating Procedures.*

12 MISCELLANEOUS EQUIPMENT CONNECTIONS

12.00 Wiring Connections

12.01 All connections to miscellaneous equipment are made via the barrier strip mounted on the front of the MPRU PCB, as shown in Figure 43.

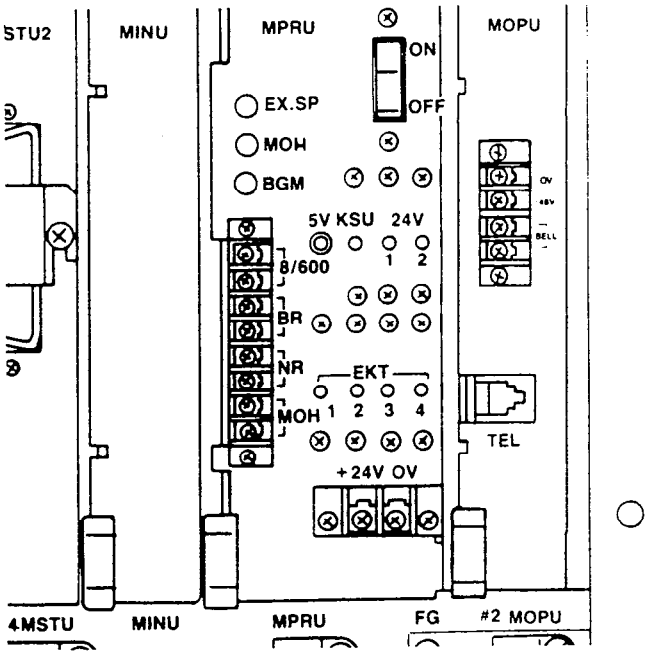

FIGURE 43—MPRU CONNECTION STRIP

12.10 Music-on-Hold/Background Music Source

12.11 Connect the customer-provided MOH/BGM program source (tuner, tape deck or commercial source) via the two MOH terminals on the MPRU barrier strip. Input impedance is 600 ohms.

12.20 Music-on-Hold Volume Control

12.21 Adjust the MOH volume with the MOH volume control on the front of the MPRU PCB. Maximum volume is limited by internal circuits in order to comply with FCC regulations. See Paragraph 12.80 for the correct volume setting sequence.

12.30 External Paging Connections

12.31 STRATA provides access to an external paging system by dialing two digits (89). The single output connection is made via the 8/600 terminals on the front of the MPRU, and can be used in one of three ways:

a) To operate customer-provided speaker directly, via an internal 3-watt amplifier located on the MPRU PCB.

b) If more than 3 watts are required, an external customer-provided amplifier can be connected to operate the external speaker.

c) If talkback capability is required, a customer-provided talkback amplifier/speaker can be connected.

NOTE:
See Paragraph 12.80 for the correct volume setting sequence.

12.40 Direct External Speaker Connection

12.41 The exact number of speakers that may be connected to the 8-ohm, 3-watt output will depend on type of speaker used, conductor resistance, and desired volume.

12.42 The 8-ohm output impedance must be selected with the **SW2** switch on the MPRU (Figure 44). The switch must be on the side labeled "8".

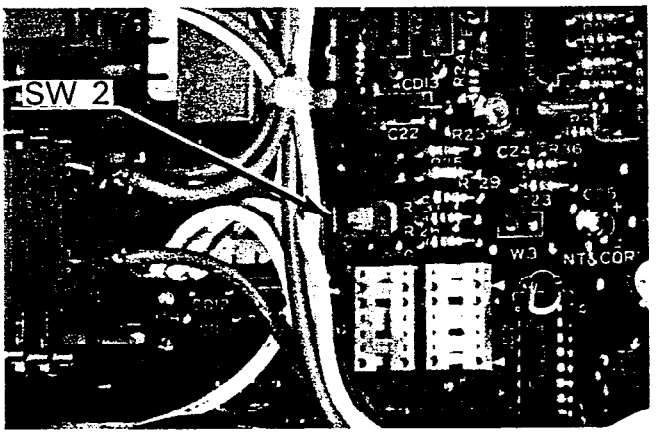

FIGURE 44—IMPEDANCE SWITCH ON MPRU

12.43 Connect the external speaker to the two 8/600 terminals on the MPRU.

12.44 Adjust the speaker volume with the EX.SP volume control on the front of the MPRU.

See Paragraph 12.80 for the correct volume setting sequence.

12.50 External Amplifier Connection

12.51 If more power is required than the MPRU amplifier can deliver, a customer-provided external amplifier may be connected to the 8/600 terminals on the MPRU (connect external speakers to the external amplifier).

12.52 Determine which output impedance is most suitable for the amplifier being used, and make the selection with the SW2 switch on the MPRU (Figure 44).

12.53 If 8-ohm impedance is chosen, the EX.SP volume control may be used to control input level to the external amplifier. If 600-ohm impedance is chosen, the level is fixed and input must be controlled by the external amplifier. See Paragraph 12.80 for the correct volume setting sequence.

12.60 Talkback Amplifier

12.61 A customer-provided talkback amplifier/speaker may be connected to the external page (8/600) terminals on the MPRU.

12.62 For talkback operation, the SW2 switch on the MPRU must be set at "600". The MPRU amplifier is not used for the 600-ohm mode in order to permit a 2-way voice path.

12.63 The EX.SP volume control on the front of the MPRU will not function when the 600-ohm mode is selected.

12.70 Background Music

12.71 Background music (BGM) can be provided in two ways through the STRATA system:

a) Internal to the system using the MOH source.

b) External to the system when an external amplifier is used on the External Page feature.

12.72 Internal BGM uses the music-on-hold program source that is connected to the MOH input terminals on the MPRU. It is broadcast through all EKT speakers (under the individual control of each station user) and will be heard if the [SPKR] key is operated with the handset on-hook and no line selected.

12.73 As a programmable option, the BGM from the MOH source can be heard via the external speaker (see Section 100-020-300, *Programming).*

12.74 BGM is automatically preempted when a page or ringing signal must be output from an EKT speaker or the external speaker.

12.75 Overall system BGM volume is set with the BGM volume control on front of the MPRU (see Paragraph 12.80 for the correct volume setting sequence). The volume at individual stations is set with volume control on the rear right-hand side of the EKT involved.

12.76 If BGM is connected via an external amplifier on the external page, it can be heard from the external speaker(s) only. STRATA, if required, can provide a dry contact control signal for muting the external BGM when a page is in progress.

12.77 To provide external BGM control, obtain and install the optional BR (K1) relay on the MPRU PCB, see Paragraph 05.11. Connect the BR terminals on the MPRU to the control terminals (mute, mike switch, etc) on the amplifier (see Figure 45).

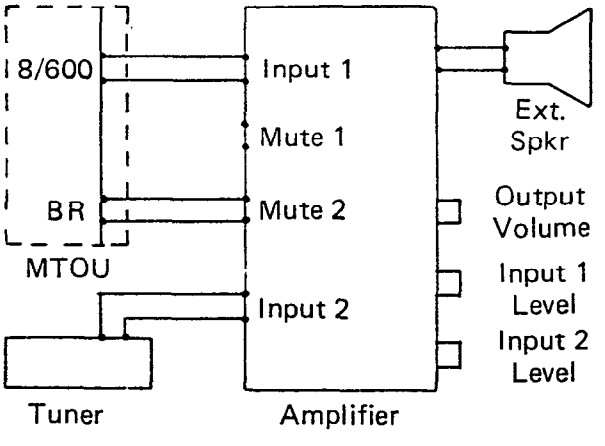

FIGURE 45
EXTERNAL AMPLIFIER HOOK-UP

12.80 Volume Setting Sequence

12.81 Refer to Figure 46. Adjust the volume for MOH, BGM and External Page in the following sequence:

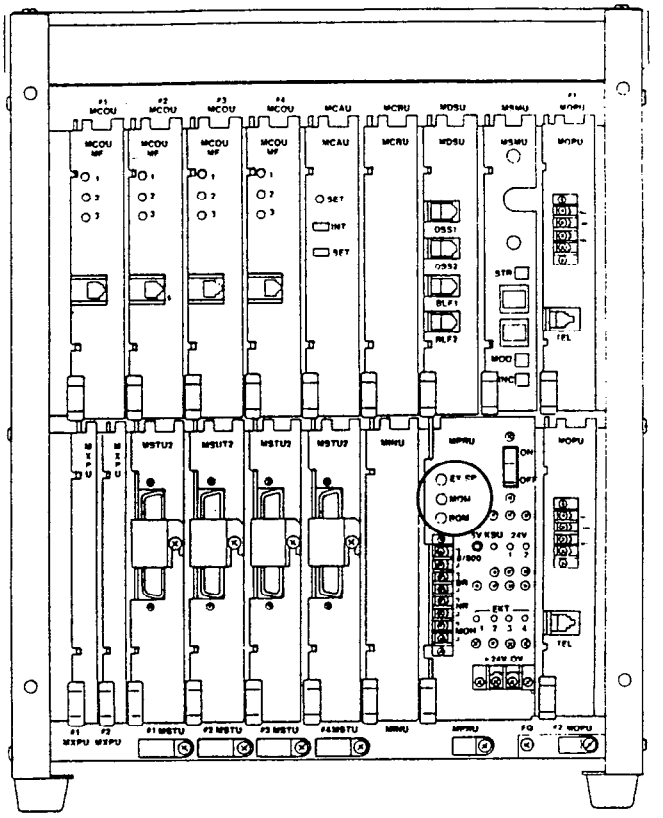

FIGURE 46—VOLUME SETTING CONTROLS

12.82 Adjust the MOH level first using the following procedure:

1) Set the **MOH** volume control on the front of the MPRU to its lowest level (counter-clockwise).

2) Lift the handset on one station and call another station using 2 CO/PBX lines.

3) At the *called* station, put the incoming call on hold, and listen on the **handset** (not the speaker) of the *calling* EKT.

4) Using the volume control on the MOH **source**, adjust MOH to the most comfortable level without distortion.

5) If a higher level is needed than can be provided by the MOH source, turn the **MOH** volume control on the MPRU slowly clockwise to achieve the most comfortable level without distortion.

6) Release the connection between the two CO lines.

7) *No* further changes should be made using the **MOH** control or the MOH source volume control.

12.83 If an external speaker is to be used in the system; adjust the external page and BGM levels as follows:

1) Adjustments should be made while an actual external page test is in progress. Adjust the voice loudness to a comfortable level. The procedure varies depending on the paging system configuration and the setting of the 8/600-ohm switch **(SW2)** on the MPRU:

   a) 8 ohms **with no** external amplifier—adjust output level using the **EX.SP** volume control on the front of the MPRU.

   b) 8 ohms **with** external amplifier—adjust output level using the **EX.SP** volume control on the front of the MPRU along with the controls on the external amplifier.

   c) 600 ohms—the volume level through STRATA is fixed in this mode; adjustments must be made using the external amplifier controls.

2) If background music is to be heard over external speaker(s):

   a) Adjust voice page level per above procedure.

   b) With music playing over the speaker(s), adjust the volume to a comfortable level using **only** the **BGM** control on the front of the MPRU. **Do not** tamper with the **EX.SP** control, external amplifier adjustments, or MOH adjustments.

   c) If background music is connected directly to the external amplifier instead of through the system, all adjustments must be made on the external amplifier.

12.84 If no external speaker is to be used in the system, adjust the BGM level as follows:

1) Using an EKT in speakerphone mode, make a call on a CO line, and adjust the EKT speaker to a comfortable level.

NOTE:
This should be done in an area that has back-

ground noise that is about average for that particular installation.

2) Disconnect the CO call and activate BGM at the EKT using the [SPKR] key.

3) Using **only** the **BGM** volume control on the front of the MPRU, adjust the BGM to a comfortable level. **Do not** use the EKT volume control.

12.90 Night Relay Service

12.91 As an option, STRATA can provide a dry contact for the purpose of controlling an external loud ringing bell (or similar device) or an answering machine when the system is in the "Nite" mode.

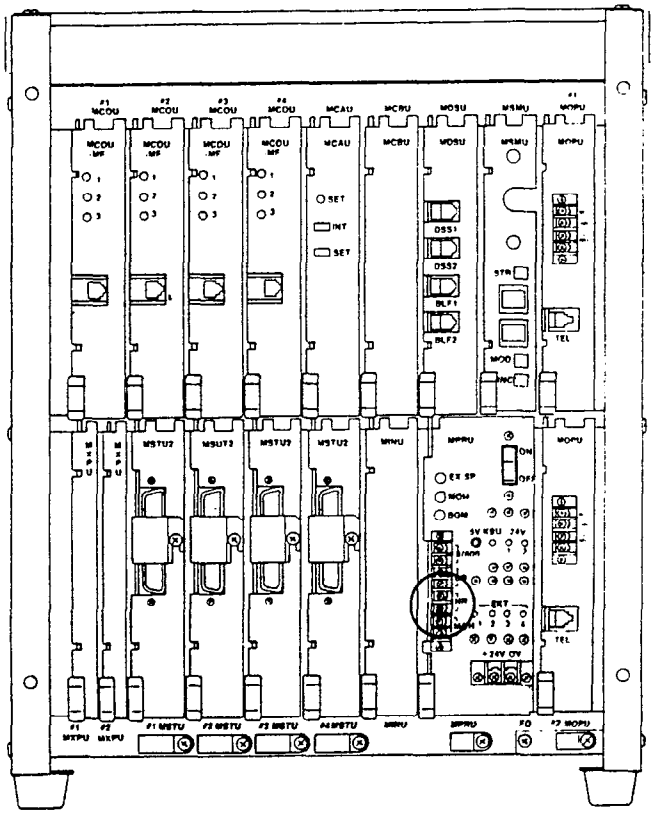

FIGURE 47—NR CONTACTS

12.92 To provide this service, obtain and install the optional NR (K2) relay on the MPRU PCB per Paragraph **05.11.** Connect the external device to the NR contacts on the front of the MPRU (see Figure 47).

IMPORTANT:
The NR and BR relay contacts are rated at 24 VDC/1.0 Amp and are not intended to operate high power devices directly. If the power required for the device being controlled exceeds the contact ratings, an external slave relay must be used.

12.93 The **W3** strap option on the MPRU allows the NR relay to function in one of two modes:

a) Answering Machine Control—if the **W3** strap remains intact, the relay is operated continuously when the system is in night service. This mode is intended for indirect control of an answering machine.

b) Night Bell Control—if the **W3** strap is cut, the relay pulses at a 1-sec. on, 3-sec. off rate when the system is in night service and an incoming call is ringing the system. The mode is intended to be used for indirect control of an external night bell.

TOSHIBA PUBLICATIONS
SECTION 100-020-250
JUNE 1983

Strata XII & XX

POWER SUPPLY

(EPSA-104) INSTALLATION

Strata XII & XX

POWER SUPPLY (EPSA-104) INSTALLATION

TABLE OF CONTENTS

PARAGRAPH	SUBJECT	PAGE
	TABLE of CONTENTS	i
	ILLUSTRATION LIST	i
01	GENERAL	1
	ENCLOSED HARDWARE LIST	1
01.10	SURFACE PREPARATION	1
01.20	MOUNTING THE EPSA	1
01.30	FUSES	2
02	BATTERY BACK-UP INSTALLATION	2
	TABLE A—MINIMUM WIRE GAUGE	4
02.10	EPSA PREPARATION	4
02.20	INSTALLING THE PBBU	5
02.30	REQUIRED DECALS & TAGS	5
02.40	BATTERY CONNECTION	5
02.50	INSTALLATION FINALIZATION	6

ILLUSTRATION LIST

FIGURE	TITLE	PAGE
1	EPSA-104	1
2	TOGGLER	1
3	INSTALLING TOGGLER	1
4	TOGGLER PIN	2
5	TOGGLER SCREW	2
6	WALL MOUNTED EPSA	2
7	PBBU PCB	3
8	EPSA	3
9	EPSA TERMINALS	4
10	OPEN EPSA	5
11	PBBU IN PLACE	5
12	BATTERY WIRING DIAGRAM	6
13	BATTERY TERMINAL CONNECTION	6

01 GENERAL

01.01 The EPSA-104 is equipped with a built-in wall mounting bracket, as shown in Figure 1, to allow it to be mounted on a wall or other flat, vertical surface.

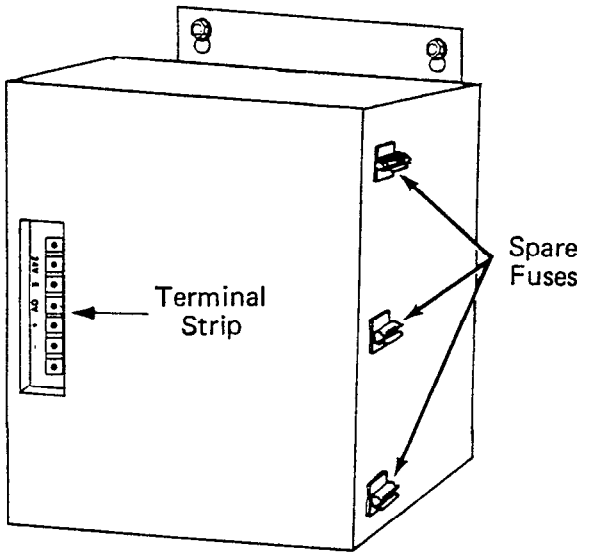

FIGURE 1—EPSA-104

01.02 Unpack and inspect the EPSA-104 and the enclosed hardware. Examine the package and make careful note of any visible damage. If any damage is found, bring it to the attention of the delivery carrier and make the proper claims.

01.03 Check the hardware list; if it is determined that any equipment within the carton is missing, contact your Toshiba supplier immediately.

01.04 The following hardware, which is required to mount and connect the EPSA to the system, is supplied with each unit.

ENCLOSED HARDWARE

Quantity	Item
2	T.C. Toggler Wall Fasteners (Figure 2)
2	#14 Hex Head Sheet Metal Screws
1	Toggler Key
1	Template P/N 117260-001 (to space the wall fasteners properly).
1	AC Fuse (spare) P/N 116438-088 (F1, 5 amp, SLO-BLO 125 VAC)
1	DC Fuse (spare) P/N 116438-030 (F2, 10 amp, Fast-BLO, 32 VDC)
1	16 AWG, 3-wire Jacketed Cable (54 inches)

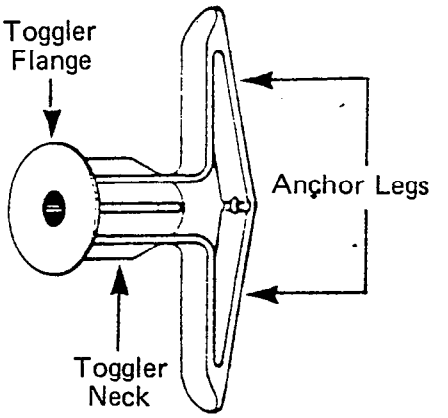

FIGURE 2—TOGGLER

01.10 **Surface Preparation**

01.11 Choose a suitable location on a vertical surface for the EPSA, and attach the template to that location temporarily. Use a spirit level to verify that the drilling points are level.

01.12 Place punch marks on the mounting surface through the two "+" marks on the template.

01.13 Enlarge the two punch marks with an 1/8-inch drill bit.

01.14 Drill through the mounting surface with a 5/16-inch bit to prepare the anchoring holes.

01.20 **Mounting the EPSA**

01.21 Press the anchor legs of the togglers together, and insert them into the anchoring holes (Figure 3) until their neck flanges are flush

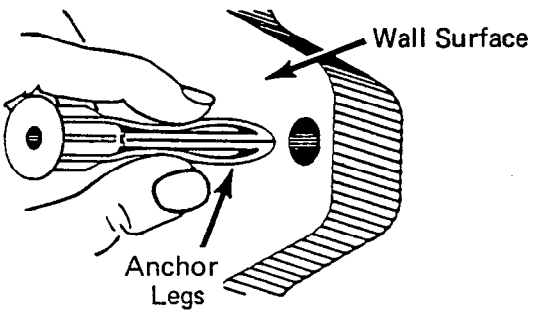

FIGURE 3—INSTALLING TOGGLER

with the mounting surface. If insertion is difficult, tap them lightly with a hammer.

01.22 Insert a toggler key into the small hole in the neck of each fastener, as shown in Figure 4. This should cause the anchor legs to "pop" open. Remove the toggler key.

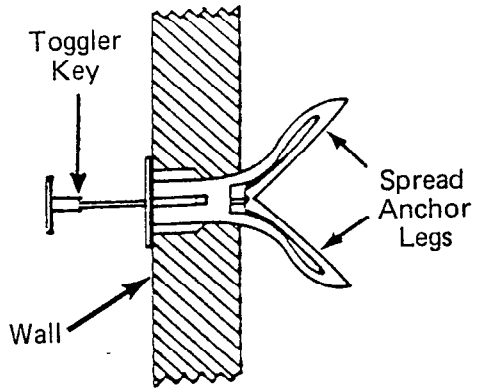

FIGURE 4—TOGGLER PIN

01.23 Thread the screws into the small holes in the center of the togglers. Leave approximately 3/16-inch clearance between the bottom of each screw head and the mounting surface (Figure 5).

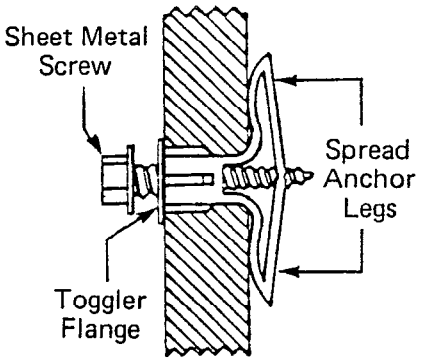

FIGURE 5—TOGGLER & SCREW

01.24 Place the EPSA against the mounting surface with the screws protruding through the holes (Figure 6).

01.25 Lower the power supply so that the narrower portions of the holes slip over the screws and the weight of the power supply is supported. Tighten the screws.

01.30 Fuses

01.31 Remove the spare fuses from the hardware carton, and place them in their individually marked holders (see Figure 6).

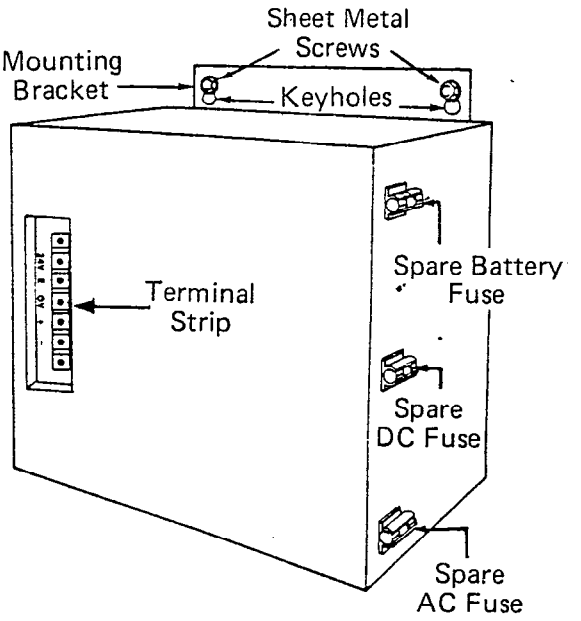

FIGURE 6—WALL MOUNTED EPSA

01.32 Remove and inspect the fuses that were shipped inside the EPSA. If either fuse is defective, replace it and order another spare fuse from your Toshiba supplier.

01.33 Prior to installing the PBBU, connect the EPSA to the MKSU per Paragraph **06.10,** Section 100-020-200, *Installation.*

02 BATTERY BACK-UP INSTALLATION

02.01 The power battery back-up unit (PBBU) in Figure 7 is an optional PCB which may be installed in the EPSA-104 to interface with two auxiliary 12 VDC batteries. In the event of an electrical power failure, the PBBU provides an automatic battery power source, permitting a typical STRATA system to continue normal operations for some time (in direct ratio with the type and size of the batteries chosen).

02.02 The PBBU contains a voltage sensing circuit which causes an electro-mechanical relay to connect the back-up battery power to the system before the EPSA output voltage drops below 21 VDC (at which point system functions would be disrupted and existing calls would be disconnected).

02.03 When the normal source of electrical

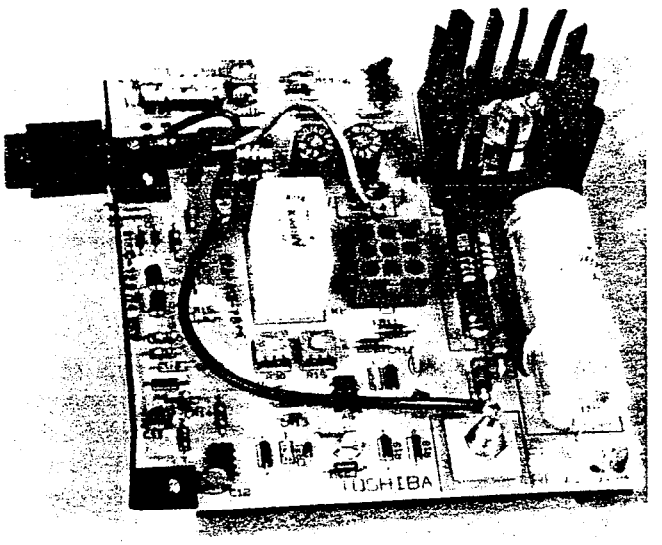

FIGURE 7—PBBU PCB

power is restored, the voltage sensing circuit relay will disconnect the standby battery power source.

02.04 If the standby battery power source output falls below 21 VDC while it is connected to the system, the voltage sensing circuit will cause the relay to disconnect the standby batteries from the system.

02.05 The standby batteries will not be re-connected unless:

- The "Battery Override" switch (Figures 7 and 8) is placed in the ON position, or . . . .
- The depleted batteries are replaced by a freshly charged pair and the "Battery Override" switch is turned on and then released.

02.06 The PBBU also contains circuitry to provide the charge current necessary to maintain the batteries at a satisfactory level of charge while the STRATA system is in normal operation. An external fast charger may also be connected across the battery output terminal connections.

02.07 The PBBU kit contains the following items:

- PBBU—power battery backup PCB.
- Fuse—spare battery protection fuse.
- Cable Clamp—7/16-inch cable clamp which may be needed to secure the wiring harness inside the EPSA.

FIGURE 8—EPSA-104

- "PBBU-3 REV A"—decal to be placed on the front of the EPSA.

- "WARNING"—warning tag for attachment to the 115 VAC power cord.

02.08 In addition to the PBBU kit, these items are needed to install a PBBU.

- Two Batteries—lead-acid, maintenance-free automobile batteries (80 amp/hr maximum) are recommended. The procedures in Paragraph **02.40** assume batteries with side-mounted terminals are used.

- Battery Rack & Separator—a battery rack and separator should be used to assure the batteries will not tip and spill battery acid or accidentally short the battery terminals.

- Two-Wire Connecting Cable—a 2-wire connecting cable, terminating at one end with 3/8-inch ring terminals and at the other end with 1/8-inch spade terminals, is required to connect the batteries and the EPSA. The minimum wire gauge must be determined by the loop length of the connecting cable (as indicated in Table A).

TABLE A—MINIMUM WIRE GAUGE

LOOP LENGTH	RECOMMENDED SIZE
12 ft.	16 gauge
20 ft.	14 gauge
30 ft.	12 gauge
50 ft.	10 gauge

- Single-Wire Cable—a 16 AWG single-wire cable, approximately 18 inches in length and equipped with ring terminals, is required to connect the two batteries in series.

- Cable Clamp—a cable clamp should be used to prevent cable movement from affecting the batteries.

- Battery Protection—a 10-amp, 32V fuse, or a 10-amp DC instantaneous-tripping circuit breaker, is required to protect the batteries from power surge or short circuit damage.

- Bolts—four 3/8 x 1/2-inch hex head bolts are required to connect the cable terminals to the batteries.

- Washers—eight 3/8-inch flat washers and four 3/8-inch internal-tooth lock washers are required for the above cable terminal connections.

- Battery Cabinet—if the batteries are not located in a well-ventilated closed or other secure area, protected from fire or sparks, a properly ventilated protective cabinet is required to safeguard them.

CAUTION:
The EPSA, battery, battery rack, and the interconnecting wiring shall be installed only by qualified installers, in accordance with all applicable electrical codes and Article 480 of the National Electrical Code. Before installing see the "Installation Instructions" enclosed with each item.

IMPORTANT:
Only trained personnel may service or install the PBBU and EPSA-104.

02.10 EPSA Preparation

02.11 Verify that the power switch on the MPRU is in the OFF position, and then disconnect the 115 VAC power cord.

02.12 Remove the terminal strip cover from the OUTPUT/24V, 8A-24V/BATTERY terminals (Figure 9).

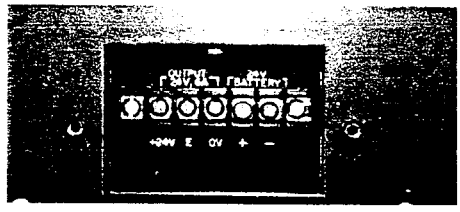

FIGURE 9—EPSA TERMINALS

02.13 The EPSA cover is secured by seven screws. Viewing the EPSA as if it is wall-mounted, two screws will be located at the rear edge of the top, three on the side facing outward and two on the rear edge of the bottom.

02.14 Remove all seven screws.

02.15 Remove and set cover aside.

02.16 Locate and trace the multi-wire harness in the lower portion of the EPSA (the area away from the built-in mounting bracket). The harness originates from the transformer and the terminals mounted in the control panel. This harness terminates in a rust-colored square connector.

02.17 The harness is secured to the chassis with a cable clamp (Figure 10). Loosen the screw and nut slightly to allow movement of the harness.

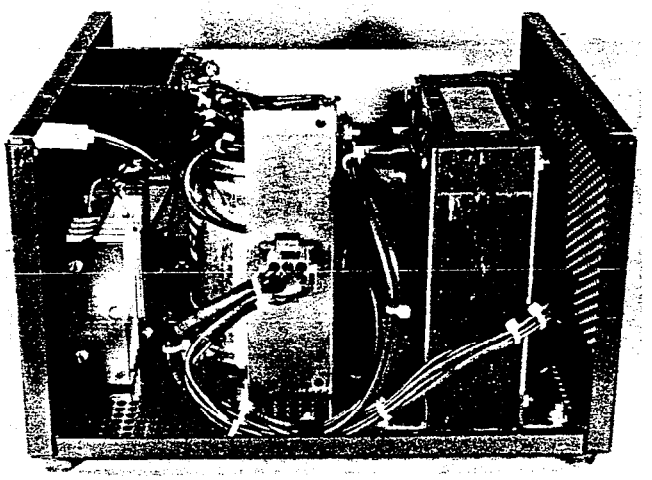

FIGURE 10—OPEN EPSA

02.20 **Installing the PBBU**

02.21 Two plugs are mounted in the EPSA control panel; pop them out and discard.

02.22 Unwrap the PBBU. Remove and save the screw located in the mounting bracket (Figure 11).

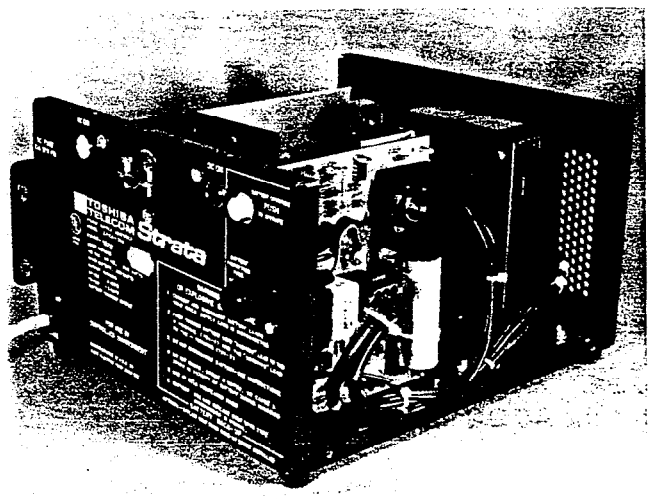

FIGURE 11—PBBU IN PLACE

02.23 Slip the PBBU fuse holder and battery override button through their respective ports in the control panel (Figure 11). The PBBU mounting bracket should be flush against the rear of the control panel. The harness should flow around the PBBU PCB, with no wires beneath it.

02.24 Align the two tan-colored PBBU pins with the two holes in the heat sink (Figure 10). Press the pins into the holes until they catch.

02.25 Use the previously removed screw and secure the mounting bracket to the control panel (Figure 11).

02.26 Plug the rust-colored connector into the nine-hole jack in the center of the PBBU. **Do not** force the prongs into the jack, they are keyed so that they can be mated in only one position.

02.27 Replace the EPSA cover and secure it with the seven screws originally removed.

02.28 Depress the battery override button (Figure 11). If it catches and stays in, press it again to cause it to release and protrude out of the control panel. The button must be out for the EPSA to operate normally.

02.29 Remove the spare fuse from the PBBU kit, and put it in the holder located on the side of the EPSA.

02.30 **Required Labels and Warning Tags**

02.31 Remove the warning tag from the kit and tie it to the power cord where it emerges from the EPSA.

02.32 A "PBBU-3 REV A" decal must be placed on the control panel of the EPSA. Remove the decal from the kit, peel the backing off, and place it on the control panel.

02.40 **Battery Connection**

DANGER!:

Do not attempt to connect the batteries to the EPSA while the AC power cord is plugged in, or without the EPSA being connected to the MKSU. Do not connect the two-wire cable to the batteries before connecting it to the EPSA. Once the batteries are connected to the EPSA the 24V output terminals are live.

02.41 Select a location for the batteries near the power supply. The loop length of the cable connecting them to the power supply will determine the minimum gauge wire which can be used in the cable. See Table A.

DANGER!:
The area in which the batteries are to be located must be well ventilated to prevent a dangerous accumulation of battery gases. The batteries must also be protected from moisture and extreme temperatures.

itive terminal of battery #2 (see Figure 13).

02.49 Connect the two batteries with the single-wire cable—one end to the positive terminal on battery #1 and the other end to the negative terminal on battery #2 (Figure 12).

NOTE:
Place the cable clamp over the two-wire cable and secure it to either the battery rack or the protective cabinet. Adjust the clamp to relieve strain on the cable.

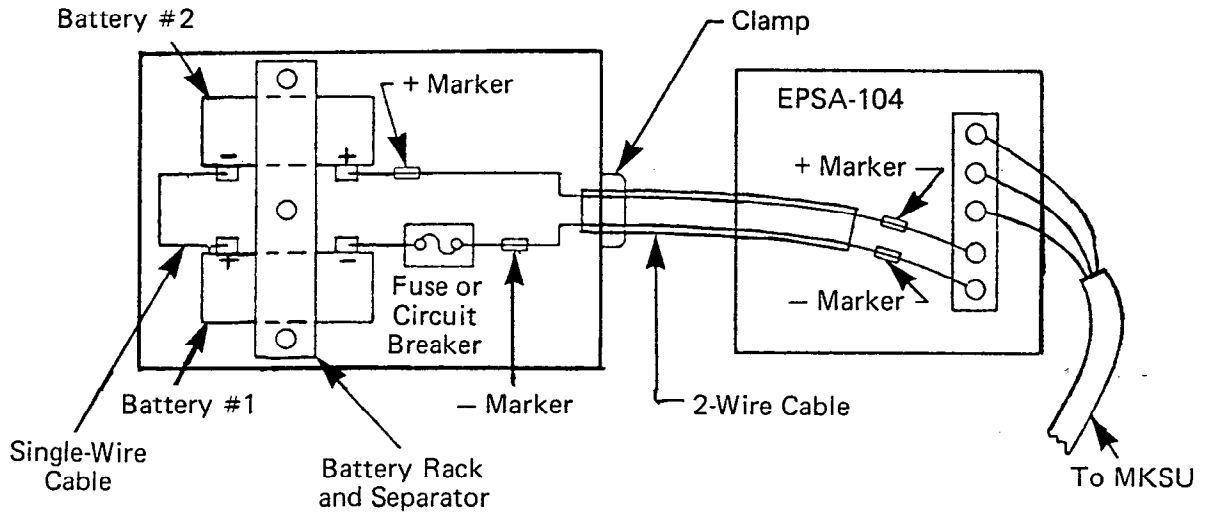

FIGURE 12—BATTERY WIRING DIAGRAM

02.42 Secure the batteries in the battery rack and separator, which should be located in a minimum access area, such as a closet or a well ventilated cabinet.

02.43 Verify that the battery override button is in the OFF position (out).

02.44 Loosen the two screws on the terminal strip identified as 24V/BATTERY.

02.45 See Figure 12; match positive to positive and negative to negative.

02.46 Connect the battery fuse (or circuit breaker) lead to the negative terminal on battery #1 (Figure 13).

02.47 Attach the negative wire of the 2-wire cable to the battery fuse (or circuit breaker).

02.48 Connect the positive wire to the pos-

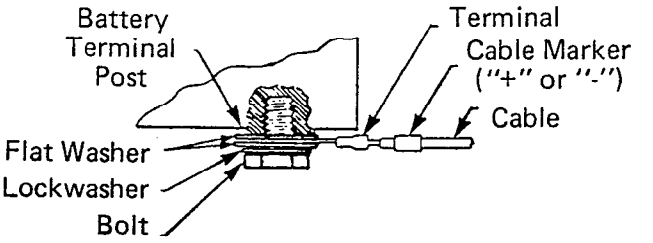

FIGURE 13
BATTERY TERMINAL CONNECTOR

02.50 **Installation Finalization**

02.51 Plug the AC power cord in, and verify that the AC ON indicator is lit.

02.52 Unplug the AC power cord, and verify that the DC ON indicator is lit to indicate the batteries are supplying electrical power.

02.53 Replace the terminal strip cover and test the STRATA system functions under both AC and battery back-up power.

IMPORTANT:
When testing is complete, make certain that the battery override button is in the OFF position and that the AC ON indicator is lit.

SYSTEM PROGRAMMING
SECTION 100-020-300
JUNE 1983

Strata XII & XX

SYSTEM PROGRAMMING

Strata XII & XX

SYSTEM PROGRAMMING

TABLE OF CONTENTS

PARAGRAPH	SUBJECT	PAGE
	TABLE of CONTENTS	i
	ILLUSTRATION LIST	ii
01	INTRODUCTION	1
02	PROGRAMMING PROCEDURES	1
02.00	General	1
02.10	Programming CO 18~21	2
02.20	Multiple Station Programming	2
02.30	Preparation	2
02.40	System Options	3
02.50	CO Line Options	4
02.60	Station Options	5
	TABLE 1–SYSTEM RECORD SHEET	11
02.70	Initialization	22
	TABLE 2–CRDU POSITIONS	22
02.80	System Data Entry	23
	TABLE 3–INITIALIZED DATA	23
	TABLE LIST	25
03	SYSTEM DATA PRINTOUT	25
03.00	System Data Printout Via SMDR	25
	TABLE 4-SYSTEM DATA PRINTOUT SELECTION CODES	26
	TABLE 5-SPEED DIAL MEMORY PRINTOUT SELECTION CODES	27
	TABLE 6-PROGRAM 01–SYSTEM ASSIGNMENTS (BASIC)	32
	TABLE 7-PROGRAM 02–SYSTEM ASSIGNMENTS (OPTIONS)	33
	TABLE 8-PROGRAM 03–SYSTEM ASSIGNMENTS (OPTIONS)	34
	TABLE 9-PROGRAM 04–MCOU OUTPULSING SELECTION	35
	TABLE 10-PROGRAM 05–AUTOMATIC RECALL FROM HOLD TIMING	36
	TABLE 11-PROGRAM 06–AUTOMATIC RELEASE ON HOLD ENABLE	37
	TABLE 12-PROGRAM 07–AUTOMATIC RELEASE ON HOLD TIMING	38
	TABLE 13-PROGRAM 08–TENANT SERVICE SELECTION	39
	TABLE 14-PROGRAM 09–CO LINE "DIAL 9" GROUP SELECTION	40
	TABLE 15-PROGRAM 10–PBX BACK-UP	41
	TABLE 16-PROGRAM 1X–PBX ACCESS CODES	42
	TABLE 17-PROGRAM 20–TOLL RESTRICTION DISABLE	43
	TABLE 18-PROGRAM 2X–TOLL RESTRICTION EXCEPTION CODES	44
	TABLE 19-PROGRAM 3XX–STATION CO LINE ACCESS	45
	TABLE 20-PROGRAM 4XX–STATION TYPE & KEY ASSIGNMENT	46
	TABLE 21-PROGRAM 5XX–STATION CLASS OF SERVICE	47
	TABLE 22-PROGRAM 6XX–TOLL RESTRICTION CLASSIFICATION	48
	TABLE 23-PROGRAM 7XX–STATION OUTGOING RESTRICTION	49
	TABLE 24-PROGRAM 8XX–CO RINGING ASSIGNMENTS-DAY	50
	TABLE 25-PROGRAM 8#XX–CO RINGING ASSIGNMENTS-DAY 2	51
	TABLE 26-PROGRAM 9XX–CO RINGING ASSIGNMENTS-NITE	52

Strata XII & XX

SYSTEM PROGRAMMING

ILLUSTRATION LIST

FIGURE	TITLE	PAGE
1	Program 4XX—Flexible Key Assignments	6
1A	Program 4XX—Flexible Key Assignments	7
2	Printout Sample (Programs 01~09)	28
3	Printout Sample (Programs 10 & 1X)	28
4	Printout Sample (Programs 20 & 2X)	28
5	Printout Sample (Program 3XX, Station 10~41)	29
5A	Printout Sample (Program 3XX, Station 42~65)	30
6	Printout Sample (Speed Dial-System)	31

01 INTRODUCTION

01.01 The data governing overall system operation and feature execution for the STRATA XII & XX systems is stored in read-only-memory (ROM) and cannot be altered in the field. However, the data controlling operation of the various options, both system and station, is stored in random-access-memory (RAM) and can easily be changed according to individual installation requirements.

01.02 All STRATA options are controlled by selections made in the system data tables. An initialization process is provided for verifying predetermined system assignments. The installer can then proceed with any necessary changes.

01.03 All system data changes are made via station 17 (as the input-output device), which must be equipped with a 20-key EKT. Whenever the system is placed in the programming mode, the keys on station 17 are used to enter data while its LEDs display the current data. While station 17 is in the programming mode, the remainder of the system may still be used in the usual fashion.

01.04 Internal battery power is provided to prevent loss of system data memory in the event of a power failure.

NOTE:
Whenever a system is installed or the MCAU/AMMU are changed, the system must be initialized. See Paragraph 02.70.

02 PROGRAMMING PROCEDURES

02.00 General

02.01 The STRATA system must be in the programming mode before system data can be verified or altered. With the exception of station 17, normal system functions are not suspended while in the programming mode.

02.02 When the system is in the programming mode, station 17 is used to enter the system data in one of two ways:

NOTE:
Station 17 must be equipped with a 20-key EKT, and all tables and procedures that follow assume station 17 has the "standard" key pattern (INT, CO 1~17, DND and MW/FL).

- In the majority of programs (Type 1), the [INT] and [CO] keys are used to change "bits" of system data. The LEDs associated with the [INT] and [CO] keys show the status of that "bit" before and after key depression. A particular key and LED will have a different meaning, depending upon the program number being used.

- In Type 2 programs, the dial pad is used to enter data. In this case, the system, using the INT and selected CO LEDs, verifies the entered data by displaying the number in Binary format.

02.03 The programming mode is activated by locking in the SET switch on the MCAU and then depressing the [SPKR] key on station 17. After the station has been activated, a program number is dialed on the station dial pad, and the system will respond as follows:

Type 1 programs:
Station 17 LEDs will display the existing data in these categories.

Type 2 programs:
CO 10 LED on station 17 will flash continuously. Actual data can be reviewed without alteration by multiple depressions of the [#] key.

02.04 Data can be altered while it is being displayed. To input new data via station 17, perform the following:

Type 1 program:
The state of an LED is altered by depressing its associated key. Depressing the key while the LED is "on" will turn it off and vice-versa.

Type 2 program:
Data is entered via the dial pad. The LEDs will display the data and digit number in Binary format.

02.05 Once the desired data is entered and displayed, it is written into memory by depressing the [HOLD] key on station 17.

- System and CO line options are written into temporary storage when the [HOLD] key is depressed. After all changes in these categories have been made, transfer the data into working memory per Paragraph 02.06.

- Station option data (with the exception of CO line access assignments) are written into the main data memory; therefore, all changes are effective immediately after the [HOLD] key is depressed. However, it is recommended that the data transfer procedures per Paragraph 02.06 be utilized for added programming protection.

02.06 Data may be secured in working memory in one of two ways:

1) If the system is not in service, release the SET switch on the MCAU, and cycle (rock) the MPRU power switch off and on to transfer all data into the main data memory. Note, all calls are dropped when this occurs.

2) If the system is in service and no calls should be dropped, depress the following keys, in the order given here, on station 17: [SPKR] [#] [*] [9] [INT] [CO 1] [CO 4] [CO 5] [CO 8] [CO 9] [CO 12] [CO 13] [HOLD]. This code will secure the data in working memory without cancelling any calls. Release the SET switch on the MCAU.

02.10 Programming CO 18~21

02.11 Some Type 1 programs use the CO key/LEDs to represent themselves. The EKT at station 17 has a maximum of 17 CO line keys in a STRATA XX system. In order to program CO 18~21, it is necessary to dial a [*] after the first digit of the program number. CO key/LEDs 1~4 will then function as CO 18~21. For example:

For Program 04: Dial [0] [*] [4]

For Program 7XX: Dial [7] [*] [X] [X]

02.20 Multiple Station Programming

02.21 Programs 3XX through 9XX are used to select options for individual stations (where XX represents the station number of the station being programmed). To save time, it is possible to program *all* stations simultaneously or in groups.

02.22 Multiple station programming is accomplished by substituting a special group code for the station number part of the program number (XX). The codes are:

[0] [0]: All stations
[0] [1]: Stations 10~17
[0] [2]: Stations 18~25
[0] [3]: Stations 26~33
[0] [4]: Stations 34~41
[0] [5]: Stations 42~49
[0] [6]: Stations 50~57
[0] [7]: Stations 58~65

02.23 When the multiple station group code is entered, the LEDs will display existing data as follows:

Steady LED: Data is the same for all stations in dialed group.

Flashing LED: Data is selected for at least one, but not all stations in that group.

02.24 The state of an LED is altered by depressing its associated key. LEDs that are flashing can be cycled through three states (flashing, on, off) by multiple key depressions. Other LEDs will cycle between on and off states only. Select data as follows:

LED on: Selects LED "ON" for all the stations in the group.

LED off: Selects LED "OFF" for all the stations in the group.

LED flash: No change to any station in the group.

02.25 Once the proper data is selected, depress the [HOLD] key in the usual manner to write it into memory.

02.30 Preparation

02.31 Before STRATA system data can be programmed, option selections must be made and then indicated on the System Record Sheet (shown in Table 1). The Record Sheet, one of which accompanies each MKSU, will then serve as a programming guide and installation record.

02.32 Programming options are grouped according to the three categories listed below, with several program numbers associated with each category. A different program number is used for each option or group of options being selected.

a) System Options
   01: System Assignments (Basic)
   02: System Assignments (Options)
   03: System Assignments (Options)
   04: MCOU MF/DP Outpulsing Selection
   05: Automatic Recall From Hold Timing

b) CO Line Options
   06: Automatic Release On Hold (AROH) Enable
   07: Automatic Release on Hold Timing
   08: Tenant Service Selection
   09: CO "Dial 9" Group Selection (OPX)
   10: PBX Backup
   1X: PBX Access Codes
   20: Toll Restriction Disable
   2X: Toll Restriction Exception Codes

c) Station Options
   3XX: Station CO Line Access
   4XX: Station Type and Flexible Key Assignment
   5XX: Station Class of Service
   6XX: Toll Restriction Classification
   7XX: Station Outgoing Restriction
   8XX: CO Ringing Assignments-Day
   8#XX: CO Ringing Assignments-Day #2
   9XX: CO Ringing Assignments-Nite

02.33 The System Record Sheet is used to record the assignment of each key/LED for any given program number. For Type 1 programs an "X" placed in the record indicates that the associated LED should be turned on (lit) during the programming process. For Type 2 programs the actual data is recorded.

02.34 After making the system option selections per the following instructions, record the various choices in the System Record Sheet. Use the tables at the end of this section for detailed programming instructions.

02.40 System Options:

01 Program—System Assignments (Basic)

Five options are selected with this program, using [INT], [CO 2], [CO 3], [CO 4] and [CO 5] keys to change the status of their respective LEDs. For the options selected, mark an X as indicated.

1) Pause Timing (After Flash)—mark an X next to CO 5 if a 3-second pause (for dial tone delay) is required after a FLASH. Leave blank if a 1.5 second pause is sufficient.

2) Pause After Flash—mark an X next to CO 4 if the system is to insert a pause (defined by CO 5, this program) between a FLASH and an automatically dialed number.

3) Pause Timing (PBX Access Code)—mark an X next to CO 3 if a 3-second pause (for dial tone delay) is required after a PBX CO access code is dialed by the Automatic Dialing feature. Leave blank if a 1.5-second pause is sufficient.

4) Flash Time—mark an X next to CO 2 if the line-open interval produced by the [MW/FL] key is to be 0.5 seconds for behind PBX operation. Leave blank if the 2.0-second pause for dial tone recall is required.

5) Tone First—mark an X next to INT if Tone First intercom signalling is required. Leave blank if Voice First signalling is required.

02 Program—System Assignments (Options)

Six options are selected with this program, using the [INT], [CO 1], [CO 2], [CO 8], [CO 9] and [CO 10] keys to change the status of their respective LEDs. For the options selected, mark an X as indicated.

1) Station 24/25 OPX—mark an X next to CO 10 if MOPU #3 is equipped and *only* station 24 is to be used. (Has no meaning if MOPU #3 is not equipped.)

2) Station 22/23 OPX—mark an X next to CO 9 if MOPU #2 is equipped and *only* station 22 is to be used. (Has no meaning if MOPU #2 is not equipped.)

3) Station 20/21 OPX—mark an X next to CO 8 if MOPU #1 is equipped and *only* station 20 is to be used. (Has no meaning if MOPU #1 is not equipped.)

4) Nite Ring over External Page—mark an X next to CO 2 if Nite Ringing over External Page is required.

5) Background Music over External Page—mark an X next to CO 1 if BGM is to be heard over the External Page circuit.

6) External Page with All Call—mark an X next to INT if the External Page circuit is to be included in an All Call Page

03 Program—System Assignments (Options)

Nine options are selected with this program using [INT] and [CO] keys to change the status of their respective LEDs. For the options selected, mark an X as indicated.

1) Station 10 DND/NITE Key—mark an X next to CO 9 if the DND/NITE key on station 10 is to be a DND key. Leave blank if NITE is required.

2) Nite Ringing Modes—mark an X next to CO 8 if three ringing modes are used, leave blank if two ringing modes are required.

3) Tenant Service—mark an X next to CO 7 if system is to be equipped with Tenant Service.

4) Tone First—mark an X next to CO 6 if tone first signalling is to be used with the DSS.

5) Message Waiting Station 12—mark an X next to CO 4 if station 12 is to be the message waiting center.

6) Message Waiting Station 11—mark an X next to CO 3 if station 11 is to be the message waiting center.

7) Message Waiting Station 10—mark an X next to CO 2 if station 10 is to be the message waiting center.

8) DSS 2—mark an X next to CO 1 if the system is to be equipped with DSS 2.

9) DSS 1—mark an X next to INT if the system is to be equipped with DSS 1.

NOTE:
Only one message center is permitted; if more than one station is chosen as a message waiting center, station 10 will have priority.

04 Program—MCOU MF/DP Outpulsing Selection

Selects MF or rotary dial outpulsing using each third CO line key to represent its group of three lines.

- Mark an X next to the appropriate key that represents its group (for example: CO 1=CO 1, CO 2 and CO 3; CO 4=CO 4, CO 5, CO 6; etc.) if DP is required. Leave blank if MF is required.

05 Program—Automatic Recall from Hold Timing

Sets the timing for the Automatic Recall from Hold feature.

1) If recall is desired, select a time period of 16-160 seconds and mark an X next to the appropriate key in the System Record Sheet. The times **are not** accumulative—only one key can be selected.

2) If no recall is required, mark an X next to INT.

02.50 CO Line Options:

06 Program—Automatic Release on Hold Enable

Selects whether or not the Automatic Release on Hold (AROH) feature is to function on a given CO line; the CO line keys represent themselves.

- Mark an X next to each CO line that **requires** AROH.

07 Program—Automatic Release on Hold Timing

Selects Cross Bar (XB) or ESS timing for the AROH feature using each CO line key to represent itself.

- Mark an X next to each CO line that requires XB timing; leave blank if ESS timing is required.

NOTE:
This selection will have no meaning if AROH was rejected in Program 06

08 Program—Tenant Service Selection

Informs the system which CO lines are assigned to which tenant. Night ringing transfer of lines assigned to Tenants #1 and #2 will be controlled by DSS #1 (station 10) and DSS #2 (station 11), respectively. Only lines assigned to Tenant #1 will activate Nite Ringing over External Page. Each CO key represents itself.

- Mark an X next to each key that is to belong to the *second* tenant.

NOTE:
This selection will have no meaning if Tenant Service was not selected in Program 03.

09 Program—CO "Dial 9" Group Selection

Informs the system of the CO lines that should be considered for selection when an OPX dials "9". Each CO key represents itself.

- Mark an X next to each CO key that is to be included in the "Dial 9" group.

10 Program—PBX Backup

Informs the system if the CO line key is actually connected to a PBX station line. The system will recognize PBX access codes on selected line(s).

- Mark an X next to each CO line that is to be connected to a PBX station line.

1X Program—PBX Access Codes

Informs the system of the access codes used by the PBX that is connected to the lines selected in Program 10. STRATA will recognize the access codes and react appropriately for Toll Restriction, Automatic Dialing and Repeat Last Number Dialed.

- Enter the actual access codes (maximum: 8).

NOTE:
If the access code is a single digit, enter "" in the second column. If all combinations following a particular 1st digit are to be considered access codes (e.g. 91, 92, 93, etc), enter "D" (do not care) in the second column.*

20 Program—Toll Restriction Disable

Selects whether or not the Toll Restriction feature is to function on a given CO line; the CO line keys represent themselves.

- Mark an X next to each CO line on which Toll Restriction is not to function.

2X Program—Toll Restriction Exception Codes

Informs the system of a maximum of five 4-digit codes (area codes or office codes) that are allowed to be dialed by Toll Restricted stations.

- Enter the actual 4-digit codes (maximum: 5).

NOTE:
1. *Stations allowed access to codes 1, 2 and 3 may dial up to seven digits following the 4-digit codes.*

2. *Stations allowed access to codes 4 and 5 may dial up to 29 digits (for MCI, SPRINT, etc.)* ***following*** *the 4-digit codes.*

02.60 Station Options:

3XX Program—Station CO Line Access

The ability of an individual station to access any of the CO lines is determined by selections made using this program. A station denied access to a CO line by this program will have neither key nor LED functions for that CO line.

- Selections must be repeated for all stations—mark an X next to each CO line that is to be accessed by the station in question.

4XX Program—Station Type and Flexible Key Assignment

Informs the system of what type and style telephone (or DSS) is being used at each station, also provides for flexible CO line assignment. (See Figures 1 and 1A for the various key designation strips.)

a) 10-key EKT:

#5 Mark an X next to CO 17 if EKT is equipped with INT, CO 20~CO 14 (numbered in reverse order), DND, MW/FL.

#4 Mark an X next to CO 16 if EKT is equipped with INT, CO 14~CO 20, DND, MW/FL.

#3 Mark an X next to CO 15 if EKT is equipped with INT, CO 10~CO 16, DND, MW/FL.

#2 Mark an X next to CO 14 if EKT is equipped with INT, CO 6~CO 12, DND, MW/FL.

#1 Mark an X next to CO 13 if EKT is equipped with INT, CO 1~CO 7, DND, MW/FL.

b) 20-key EKT:

#13 Mark an X next to CO 12 if EKT is equipped

PROGRAM 4XX
STATION TYPE and KEY ASSIGNMENT

Below are representative Designation Strips with their respective assignment numbers for both 10- and 20-key EKTs.

10-key EKT

#1	#2	#3	#4	#5
MW/FL	MW/FL	MW/FL	MW/FL	MW/FL
DND	DND	DND	DND	DND
CO 7	CO 12	CO 16	CO 20	CO 14
CO 6	CO 11	CO 15	CO 19	CO 15
CO 5	CO 10	CO 14	CO 18	CO 16
CO 4	CO 9	CO 13	CO 17	CO 17
CO 3	CO 8	CO 12	CO 16	CO 18
CO 2	CO 7	CO 11	CO 15	CO 19
CO 1	CO 6	CO 10	CO 14	CO 20
INT	INT	INT	INT	INT

20-key EKT

#1	#2	#3	#4
MW/FL	MW/FL	MW/FL	MW/FL
DND	DND	DND	DND
CO 17	CO 18	CO 19	CO 20
CO 16	CO 16	CO 16	CO 16
CO 15	CO 15	CO 15	CO 15
CO 14	CO 14	CO 14	CO 14
CO 13	CO 13	CO 13	CO 13
CO 12	CO 12	CO 12	CO 12
CO 11	CO 11	CO 11	CO 11
CO 10	CO 10	CO 10	CO
CO 9	CO 9	CO 9	CO 9
CO 8	CO 8	CO 8	CO 8
CO 7	CO 7	CO 7	CO 7
CO 6	CO 6	CO 6	CO 6
CO 5	CO 5	CO 5	CO 5
CO 4	CO 4	CO 4	CO 4
CO 3	CO 3	CO 3	CO 3
CO 2	CO 2	CO 2	CO 2
CO 1	CO 1	CO 1	CO 1
INT	INT	INT	INT

FIGURE 1

PROGRAM 4XX (continued)
STATION TYPE and KEY ASSIGNMENT

Below are representative Designation Strips with their respective assignment numbers for the 20-key EKT.

20-key EKT

#5	#6	#7	#8	#9	#10	#11	#12	#13
MW/FL	MW/FL	MW/FL	CO 20	CO 1	MW/FL	MW/FL	MW/FL	MW/FL
DND	DND	DND	CO 19	CO 2	DND	DND	DND	DND
CO 21	CO 21	CO 4	CO 18	CO 3	REP	REP	AD 5	AD 5
CO 16	CO 20	CO 5	CO 17	CO 4	RDL	RDL	AD 4	AD 4
CO 15	CO 19	CO 6	CO 16	CO 5	AD 7	AD 7	AD 3	AD 3
CO 14	CO 18	CO 7	CO 15	CO 6	AD 6	AD 6	AD 2	AD 2
CO 13	CO 13	CO 8	CO 14	CO 7	AD 5	AD 5	AD 1	AD 1
CO 12	CO 12	CO 9	CO 13	CO 8	AD 4	AD 4	CO 12	CO 9
CO 11	CO 11	CO 10	CO 12	CO 9	AD 3	AD 3	CO 11	CO 10
CO 10	CO 10	CO 11	CO 11	CO 10	AD 2	AD 2	CO 10	CO 11
CO 9	CO 9	CO 12	CO 10	CO 11	AD 1	AD 1	CO 9	CO 12
CO 8	CO 8	CO 13	CO 9	CO 12	CO 8	CO 12	CO 8	CO 13
CO 7	CO 7	CO 14	CO 8	CO 13	CO 7	CO 11	CO 7	CO 14
CO 6	CO 6	CO 15	CO 7	CO 14	CO 6	CO 10	CO 6	CO 15
CO 5	CO 5	CO 16	CO 6	CO 15	CO 5	CO 9	CO 5	CO 16
CO 4	CO 4	CO 17	CO 5	CO 16	CO 4	CO 8	CO 4	CO 17
CO 3	CO 3	CO 18	CO 4	CO 17	CO 3	CO 7	CO 3	CO 18
CO 2	CO 2	CO 19	CO 3	CO 18	CO 2	CO 6	CO 2	CO 19
CO 1	CO 1	CO 20	CO 2	CO 19	CO 1	CO 5	CO 1	CO 20
INT	INT	INT	CO 1	CO 20	INT	INT	INT	INT

FIGURE 1A

with INT, CO 20~CO 9 (numbered in reverse order), AD 1~AD 5, DND, MW/FL.

#12 Mark an X next to CO 11 if EKT is equipped with INT, CO 1~CO 12, AD 1~AD 5, DND, MW/FL.

#11 Mark an X next to CO 10 if EKT is equipped with INT, CO 5~CO 12, AD 1~AD 7, RDL, REP, DND, MW/FL.

#10 Mark an X next to CO 9 if EKT is equipped with INT, CO 1~CO 8, AD 1~AD 7, RDL, REP, DND, MW/FL.

#9 Mark an X next to CO 8 if EKT is an attendant station (accompanies DSS console) and is equipped with CO 20~CO 1 (numbered in reverse order).

#8 Mark an X next to CO 7 if EKT is an attendant station (accompanies DSS console) and is equipped with CO 1~CO 20.

#7 Mark an X next to CO 6 if EKT is equipped with INT, CO 20~CO 4 (numbered in reverse order), DND, MW/FL.

#6 Mark an X next to CO 5 if EKT is equipped with INT, CO 1~CO 13 plus CO 18~CO 21, DND, MW/FL.

#5 Mark an X next to CO 4 if EKT is equipped with INT, CO 1~CO 16 plus CO 21, DND, MW/FL.

#4 Mark an X next to CO 3 if EKT is equipped with INT, CO 1~CO 16 plus CO 20, DND, MW/FL.

#3 Mark an X next to CO 2 if EKT is equipped with INT, CO 1~CO 16 plus CO 19, DND, MW/FL.

#2 Mark an X next to CO 1 if EKT is equipped with INT, CO 1~CO 16 plus CO 18, DND, MW/FL.

#1 Mark an X next to INT if EKT is equipped with INT, CO 1~CO 17, DND, MW/FL.

5XX Program—Station Class of Service

Ten options are selected with this program, using [INT] and [CO] keys to change the status of their respective LEDs. The selections listed below must be repeated for each station. In all cases, mark an X where indicated.

1) Privacy Override—mark an X next to CO 17 if the station is allowed the Privacy Override feature.

NOTE:
A maximum of two stations are permitted to use the Privacy Override feature. If more than two are programmed, only the two lowest numbered stations will be allowed to use this feature and the others will be ignored.

2) DND override—mark an X next to CO 16 if the station is allowed the DND Override feature.

3) Group Page D—mark an X next to CO 7 if the station is to be included in Group Page D.

4) Group Page C—mark an X next to CO 6 if the station is to be included in Group Page C.

5) Group Page B—mark an X next to CO 5 if the station is to be included in Group Page B.

6) Group Page A—mark an X next to CO 4 if the station is to be included in Group Page A.

7) Speakerphone—mark an X next to CO 3 if the station is allowed to use the Speakerphone feature.

8) Automatic Dialing—mark an X next to CO 2 if the station is allowed the Automatic Dialing feature.

9) Automatic Line Preference—mark an X next to CO 1 if the station is allowed the Automatic Line Preference feature.

10) All Call—mark an X next to INT if the station is included in an All Call page.

6XX Program—Toll Restriction Classification

Defines type of Toll Restriction that will be functional on individual stations. Selections must

be made for each station:

1) Mark an X next to CO 13 if the station will be allowed to dial the #5 4-digit exception code.

2) Mark an X next to CO 12 if the station will be allowed to dial the #4 4-digit exception code.

3) Mark an X next to CO 11 if the station will be allowed to dial the #3 4-digit exception code.

4) Mark an X next to CO 10 if the station will be allowed to dial the #2 4-digit exception code.

5) Mark an X next to CO 9 if the station will be allowed to dial the #1 4-digit exception code.

6) Mark an X next to CO 8 if the station will be allowed to dial 411.

7) Mark an X next to CO 7 if the station will be allowed to dial 911.

8) Mark an X next to CO 6 if the station will be allowed to dial 800.

NOTE:
A maximum of eleven digits are allowed if 411, 911, 800 or Exception Code #1, 2 or 3 was dialed first. A maximum of 29 digits are allowed if Exception Code 4 or 5 was dialed first.

9) Mark an X next to CO 5 if the station will be restricted from dialing 0 as the first number.

10) Mark an X next to CO 4 if the station will be restricted from dialing 0 as the second number.

11) Mark an X next to CO 3 if the station will be restricted from dialing 1 as the first number.

12) Mark an X next to CO 2 if the station will be restricted from dialing 1 as the second number.

13) Mark an X next to CO 1 if the station will be allowed to dial 1 + 7-digit number.

14) Mark an X next to INT if the station will be restricted to dialing 7-digit numbers.

NOTES:
1. *If "Allow 1 + 7 digits" and "Restrict 1 as 1st digit" LEDs are on, Program 6XX will restrict 1 as the first digit and will not allow 1 + 7 digits to be outpulsed.*

2. *If "Allow 1 + 7 digits" and "Allow 7 digits" LEDs are on, Program 6XX will allow 1 + 7 digits or any 7-digit number.*

3. *If "Allow 800" and "Restrict 0 as 2nd digit" LEDs are on, Program 6XX will allow 800 to be outpulsed, but will restrict any other number that has 0 as the second digit.*

7XX Program—Station Outgoing Restriction

Restricts a station from outgoing access to any number of CO lines while leaving it free to answer these lines when they are ringing or on hold.

- Selections must be made for each station—mark an X next to the CO line that is to have **restricted** access by the station in question.

8XX Program—CO Ringing Assignments-Day

Selects which CO lines will ring at a given station when the system is in the "DAY" mode.

- Selections must be made for each station—mark an X next to each CO line that is to **ring** at the station in question.

NOTE:
Each line can ring on only eight stations. If more than eight are programmed, only the eight stations with the lowest station numbers will ring.

8#XX Program—CO Ringing Assignments-Day 2

Selects which CO lines will ring at a given station when the system is in the "DAY 2" mode. This program is applicable only when the three ring mode option was selected in Program 03.

- Selections must be made for each station—mark an X next to each CO line that is to **ring** at the station in question.

NOTE:
Each line can ring on only eight stations. If more than eight are programmed, only the eight stations with the lowest station numbers will ring.

9XX Program—CO Ringing Assignment-Night

Selects which CO line will ring at a given station when the system is in the "NITE" mode.

- Selections must be made for each station—mark an X next to each CO line that is to ring at the station in question.

NOTE:
Each line can ring on only eight stations. If more than eight are programmed, only the eight stations with the lowest station numbers will ring.

NOTES:

SYSTEM RECORD SHEET

PROGRAM 01-SYSTEM ASSIGNMENTS (BASIC)

KEY/LED		LED ON	LED OFF
CO 5		3-sec. Pause After Flash	1.5-sec. Pause
CO 4		Insert Pause After Flash	No Pause
CO 3		3-sec. Pause After PBX Access Code	1.5-sec. Pause
CO 2		0.5-sec. Flash	2-sec. Flash
CO 1		—	—
INT		Tone First	Voice First

X=Select (LED on) Initialized Data: All LEDS off

NOTE:
If any key/LED is not shown, it is not used.

PROGRAM 02-SYSTEM ASSIGNMENTS (OPTIONS)

KEY/LED		LED ON	LED OFF
CO 10		Sta. 24 is OPX	Sta. 24 & 25 are OPX
CO 9		Sta. 22 is OPX	Sta. 22 & 23 are OPX
CO 8		Sta. 20 is OPX	Sta. 20 & 21 are OPX
CO 2		Nite Ring/Ext. Page	Not Equipped
CO 1		BGM/Ext. Page	Not Equipped
INT		Ext. Page W/All Call	Ext. Page Not Included

X=Select (LED on) Initialized Data: All LEDs off

NOTE:
If any key/LED is not shown, it is not used.

PROGRAM 03-SYSTEM ASSIGNMENTS (OPTIONS)

KEY/LED		LED ON	LED OFF
CO 9		Sta. 10 DND key	Sta. 10 Nite key
CO 8		Three Ring Modes	Two Ring Modes
CO 7		Tenant Service§	Non-tenant
CO 6		Tone First (DSS)	Voice First (DSS)
CO 5		—	—
CO 4		M.W. Sta. 12*	Not Equipped
CO 3		M.W. Sta. 11*	Not Equipped
CO 2		M.W. Sta. 10*	Not Equipped
CO 1		DSS #2	Not Equipped
INT		DSS #1	Not Equipped

*Message Waiting Center
Initialized Data: INT & CO 2 LEDs on; all other LEDS off
§Tenant Service with DSS consoles 1 & 2

NOTE:
Only one message center is permitted; Station 10 will have priority over any other extension chosen. If any key/LED is not shown, it is not used.

PROGRAM 04-MCOU OUTPULSING SELECTION

KEY/LED		LED ON	LED OFF
CO 19		CO 19-21 have DP	CO 19-21 have MF
CO 16		CO 16-18 have DP	CO 16-18 have MF
CO 13		CO 13-15 have DP	CO 13-15 have MF
CO 10		CO 10-12 have DP	CO 10-12 have MF
CO 7		CO 7-9 have DP	CO 7-9 have MF
CO 4		CO 4-6 have DP	CO 4-6 have MF
CO 1		CO 1-3 have DP	CO 1-3 have MF

Initialized Data: All LEDs off

NOTE:
If any key/LED is not shown, it is not used.

PROGRAM 05-AUTOMATIC RECALL FROM HOLD TIMING

KEY/LED		TIME
CO 7		160 Seconds
CO 6		128 Seconds
CO 5		96 Seconds
CO 4		64 Seconds
CO 3		48 Seconds
CO 2		32 Seconds
CO 1		16 Seconds
INT		No Recall

X=Select (LED on)
Initialized Data: CO 2 LED on

PROGRAM 06 AUTO RELEASE ON HOLD ENABLE

CO 21	
CO 20	
CO 19	
CO 18	
CO 17	
CO 16	
CO 15	
CO 14	
CO 13	
CO 12	
CO 11	
CO 10	
CO 9	
CO 8	
CO 7	
CO 6	
CO 5	
CO 4	
CO 3	
CO 2	
CO 1	

X=enable (LED on)
Initialized Data:
All LEDs off

PROGRAM 07 AUTO RELEASE ON HOLD TIMING

CO 21	
CO 20	
CO 19	
CO 18	
CO 17	
CO 16	
CO 15	
CO 14	
CO 13	
CO 12	
CO 11	
CO 10	
CO 9	
CO 8	
CO 7	
CO 6	
CO 5	
CO 4	
CO 3	
CO 2	
CO 1	

X=XB (LED on)
Blank=ESS
Initialized Data:
All LEDs off

PROGRAM 08 TENANT SERVICE SELECTION

CO 21	
CO 20	
CO 19	
CO 18	
CO 17	
CO 16	
CO 15	
CO 14	
CO 13	
CO 12	
CO 11	
CO 10	
CO 9	
CO 8	
CO 7	
CO 6	
CO 5	
CO 4	
CO 3	
CO 2	
CO 1	

X=Belongs to 2nd tenant
Blank=Belongs to 1st tenant
Init Data: All LEDs off

PROGRAM 09
CO LINE "DIAL 9" GROUP SELECTION (OPX)

CO 12	
CO 11	
CO 10	
CO 9	
CO 8	
CO 7	
CO 6	
CO 5	
CO 4	
CO 3	
CO 2	
CO 1	

CO 21	
CO 20	
CO 19	
CO 18	
CO 17	
CO 16	
CO 15	
CO 14	
CO 13	

X=Include in "Dial 9" group (LED on)
Init. Data: All LEDs on

PROGRAM 10-PBX BACKUP

CO 12	
CO 11	
CO 10	
CO 9	
CO 8	
CO 7	
CO 6	
CO 5	
CO 4	
CO 3	
CO 2	
CO 1	

CO 21	
CO 20	
CO 19	
CO 18	
CO 17	
CO 16	
CO 15	
CO 14	
CO 13	

X=Connected to PBX Line (LED on)
Init. Data: All LEDs off

PROGRAM 1X-PBX ACCESS CODES

Code	1st Digit	2nd Digit
#1 (11)		
#2 (12)		
#3 (13)		
#4 (14)		
#5 (15)		
#6 (16)		
#7 (17)		
#8 (18)		

Enter Access Codes (Max: 8)
Initialized Data: None

NOTE:
If the access code is a single digit, enter "" in the second column. If all combinations following a particular 1st digit are to be considered access codes (e.g., 91, 92, 93, etc), enter "D" (don't care) in the 2nd column.*

PROGRAM 20
TOLL RESTRICTION DISABLE

CO 12	
CO 11	
CO 10	
CO 9	
CO 8	
CO 7	
CO 6	
CO 5	
CO 4	
CO 3	
CO 2	
CO 1	

CO 21	
CO 20	
CO 19	
CO 18	
CO 17	
CO 16	
CO 15	
CO 14	
CO 13	

X=disable (LED on)
Init. Data: All LEDs off

PROGRAM 2X
TOLL RESTRICTION EXCEPTION CODES

Code	Digits			
	1st	2nd	3rd	4th
#1 (21)				
#2 (22)				
#3 (23)				
#4 (24)				
#5 (25)				

Enter Actual Exception Codes (Max: 5)
Initialized Data: None

NOTE:
If codes are less than four digits, enter "" in the remaining spaces.*

PROGRAM 3XX-STATION CO LINE ACCESS

KEY/LED	Feature	Station Number																														
		10	11	12	13	14	15	16	17	18	19	20	21	22	23	24	25	26	27	28	29	30	31	32	33	34	35	36	37	38	39	40	41
CO 21	Allow																																
CO 20	Allow																																
CO 19	Allow																																
CO 18	Allow																																
CO 17	Allow																																
CO 16	Allow																																
CO 15	Allow																																
CO 14	Allow																																
CO 13	Allow																																
CO 12	Allow																																
CO 11	Allow																																
CO 10	Allow																																
CO 9	Allow																																
CO 8	Allow																																
CO 7	Allow																																
CO 6	Allow																																
CO 5	Allow																																
CO 4	Allow																																
CO 3	Allow																																
CO 2	Allow																																
CO 1	Allow																																

KEY/LED	Feature	Station Number																														
		42	43	44	45	46	47	48	49	50	51	52	53	54	55	56	57	58	59	60	61	62	63	64	65							
CO 21	Allow																															
CO 20	Allow																															
CO 19	Allow																															
CO 18	Allow																															
CO 17	Allow																															
CO 16	Allow																															
CO 15	Allow																															
CO 14	Allow																															
CO 13	Allow																															
CO 12	Allow																															
CO 11	Allow																															
CO 10	Allow																															
CO 9	Allow																															
CO 8	Allow																															
CO 7	Allow																															
CO 6	Allow																															
CO 5	Allow																															
CO 4	Allow																															
CO 3	Allow																															
CO 2	Allow																															
CO 1	Allow																															

X=select (LED on) Initialized Data: All LEDs on

PROGRAM 4XX-STATION TYPE & FLEXIBLE KEY ASSIGNMENT

KEY/LED	Feature	Station Number																														
		10	11	12	13	14	15	16	17	18	19	20	21	22	23	24	25	26	27	28	29	30	31	32	33	34	35	36	37	38	39	40	41
CO 17	10-key #5																																
CO 16	10-key #4																																
CO 15	10-key #3																																
CO 14	10-key #2																																
CO 13	10-key #1																																
CO 12	20-key #13																																
CO 11	20-key #12																																
CO 10	20-key #11																																
CO 9	20-key #10																																
CO 8	20-key #9																																
CO 7	20-key #8																																
CO 6	20-key #7																																
CO 5	20-key #6																																
CO 4	20-key #5																																
CO 3	20-key #4																																
CO 2	20-key #3																																
CO 1	20-key #2																																
INT	20-key #1																																

KEY/LED	Feature	Station Number																									
		42	43	44	45	46	47	48	49	50	51	52	53	54	55	56	57	58	59	60	61	62	63	64	65
CO 17	10-key #5																								
CO 16	10-key #4																								
CO 15	10-key #3																								
CO 14	10-key #2																								
CO 13	10-key #1																								
CO 12	20-key #13																								
CO 11	20-key #12																								
CO 10	20-key #11																								
CO 9	20-key #10																								
CO 8	20-key #9																								
CO 7	20-key #8																								
CO 6	20-key #7																								
CO 5	20-key #6																								
CO 4	20-key #5																								
CO 3	20-key #4																								
CO 2	20-key #3																								
CO 1	20-key #2																								
INT	20-key #1																								

X=select (LED on)- Initialized Data: INT LED on; all others off

NOTE:

1) Select only one type of EKT per station.

2) If the system is equipped with a DSS, 20-key #8 type is selected automatically.

PROGRAM 5XX-STATION CLASS OF SERVICE

KEY/LED	Feature	Station Number																														
		10	11	12	13	14	15	16	17	18	19	20	21	22	23	24	25	26	27	28	29	30	31	32	33	34	35	36	37	38	39	40	41
CO 17	Privacy Override Allowed																									X							
CO 16	DND Override Allowed																																
CO 7	Group Page D																																
CO 6	Group Page C																																
CO 5	Group Page B																																
CO 4	Group Page A																																
CO 3	Speakerphone Enable																																
CO 2	Automatic Dialing																																
CO 1	Auto Line Preference																																
INT	Include in All Call																																

KEY/LED	Feature	Station Number																														
		42	43	44	45	46	47	48	49	50	51	52	53	54	55	56	57	58	59	60	61	62	63	64	65							
CO 17	Privacy Override Allowed																															
CO 16	DND Override Allowed																															
CO 7	Group Page D																															
CO 6	Group Page C																															
CO 5	Group Page B																															
CO 4	Group Page A																															
CO 3	Speakerphone Enable																															
CO 2	Automatic Dialing																															
CO 1	Auto Line Preference																															
INT	Include in All Call																															

X=select (LED on) Initialized Data: CO 1, 2, 3 and INT LED on; all others off

PROGRAM 6XX-TOLL RESTRICTION CLASSIFICATION

KEY/LED	Classification	Station Number																															
		10	11	12	13	14	15	16	17	18	19	20	21	22	23	24	25	26	27	28	29	30	31	32	33	34	35	36	37	38	39	40	41
CO 13	Allow Exception Code #5*																																
CO 12	Allow Exception Code #4*																																
CO 11	Allow Exception Code #3**																																
CO 10	Allow Exception Code #2**																																
CO 9	Allow Exception Code #1**																																
CO 8	Allow 411**																																
CO 7	Allow 911**																																
CO 6	Allow 800**																																
CO 5	Restrict 0 as 1st digit																																
CO 4	Restrict 0 as 2nd digit																																
CO 3	Restrict 1 as 1st digit																																
CO 2	Restrict 1 as 2nd digit																																
CO 1	Allow 1 + 7 digits																																
INT	Allow 7 digits																																

KEY/LED	Classification	Station Number																									
		42	43	44	45	46	47	48	49	50	51	52	53	54	55	56	57	58	59	60	61	62	63	64	65		
CO 13	Allow Exception Code #5*																										
CO 12	Allow Exception Code #4*																										
CO 11	Allow Exception Code #3**																										
CO 10	Allow Exception Code #2**																										
CO 9	Allow Exception Code #1**																										
CO 8	Allow 411**																										
CO 7	Allow 911**																										
CO 6	Allow 800**																										
CO 5	Restrict 0 as 1st digit																										
CO 4	Restrict 0 as 2nd digit																										
CO 3	Restrict 1 as 1st digit																										
CO 2	Restrict 1 as 2nd digit																										
CO 1	Allow 1 + 7 digits																										
INT	Allow 7 digits																										

X=Select (LED on) Initialized Data: No restrictions

*29 digits maximum allowed
**11 digits maximum allowed

NOTE:
See Program 6XX explanation for order of preference.

PROGRAM 7XX-STATION OUTGOING RESTRICTION

KEY/LED	Feature	Station Number																														
		10	11	12	13	14	15	16	17	18	19	20	21	22	23	24	25	26	27	28	29	30	31	32	33	34	35	36	37	38	39	40	41
CO 21	Restricted																																
CO 20	Restricted																																
CO 19	Restricted																																
CO 18	Restricted																																
CO 17	Restricted																																
CO 16	Restricted																																
CO 15	Restricted																																
CO 14	Restricted																																
CO 13	Restricted																																
CO 12	Restricted																																
CO 11	Restricted																																
CO 10	Restricted																																
CO 9	Restricted																																
CO 8	Restricted																																
CO 7	Restricted																																
CO 6	Restricted																																
CO 5	Restricted																																
CO 4	Restricted																																
CO 3	Restricted																																
CO 2	Restricted																																
CO 1	Restricted																																

KEY/LED	Feature	Station Number																														
		42	43	44	45	46	47	48	49	50	51	52	53	54	55	56	57	58	59	60	61	62	63	64	65							
CO 21	Restricted																															
CO 20	Restricted																															
CO 19	Restricted																															
CO 18	Restricted																															
CO 17	Restricted																															
CO 16	Restricted																															
CO 15	Restricted																															
CO 14	Restricted																															
CO 13	Restricted																															
CO 12	Restricted																															
CO 11	Restricted																															
CO 10	Restricted																															
CO 9	Restricted																															
CO 8	Restricted																															
CO 7	Restricted																															
CO 6	Restricted																															
CO 5	Restricted																															
CO 4	Restricted																															
CO 3	Restricted																															
CO 2	Restricted																															
CO 1	Restricted																															

X=select (LED on) Initialized Data: All LEDs off

PROGRAM 8XX-CO RINGING ASSIGNMENTS-DAY

KEY/LED	Feature	Station Number																															
		10	11	12	13	14	15	16	17	18	19	20	21	22	23	24	25	26	27	28	29	30	31	32	33	34	35	36	37	38	39	40	41
CO 21	Ring in Day																																
CO 20	Ring in Day																																
CO 19	Ring in Day																																
CO 18	Ring in Day																																
CO 17	Ring in Day																																
CO 16	Ring in Day																																
CO 15	Ring in Day																																
CO 14	Ring in Day																																
CO 13	Ring in Day																																
CO 12	Ring in Day																																
CO 11	Ring in Day																																
CO 10	Ring in Day																																
CO 9	Ring in Day																																
CO 8	Ring in Day																																
CO 7	Ring in Day																																
CO 6	Ring in Day																																
CO 5	Ring in Day																																
CO 4	Ring in Day																																
CO 3	Ring in Day																																
CO 2	Ring in Day																																
CO 1	Ring in Day																																

KEY/LED	Feature	Station Number																									
		42	43	44	45	46	47	48	49	50	51	52	53	54	55	56	57	58	59	60	61	62	63	64	65
CO 21	Ring in Day																								
CO 20	Ring in Day																								
CO 19	Ring in Day																								
CO 18	Ring in Day																								
CO 17	Ring in Day																								
CO 16	Ring in Day																								
CO 15	Ring in Day																								
CO 14	Ring in Day																								
CO 13	Ring in Day																								
CO 12	Ring in Day																								
CO 11	Ring in Day																								
CO 10	Ring in Day																								
CO 9	Ring in Day																								
CO 8	Ring in Day																								
CO 7	Ring in Day																								
CO 6	Ring in Day																								
CO 5	Ring in Day																								
CO 4	Ring in Day																								
CO 3	Ring in Day																								
CO 2	Ring in Day																								
CO 1	Ring in Day																								

X=select (LED on) Initialized Data: Station 10, all LEDs on; all other LEDs off

NOTE:
Each line can ring on only eight stations. If more than eight are programmed, only the eight stations with the lowest station numbers will ring.

PROGRAM 8#XX-CO RINGING ASSIGNMENTS-DAY 2

KEY/LED	Feature	Station Number																																						
		10	11	12	13	14	15	16	17	18	19	20	21	22	23	24	25	26	27	28	29	30	31	32	33	34	35	36	37	38	39	40	41
CO 21	Ring in Day 2																																
CO 20	Ring in Day 2																																
CO 19	Ring in Day 2																																
CO 18	Ring in Day 2																																
CO 17	Ring in Day 2																																
CO 16	Ring in Day 2																																
CO 15	Ring in Day 2																																
CO 14	Ring in Day 2																																
CO 13	Ring in Day 2																																
CO 12	Ring in Day 2																																
CO 11	Ring in Day 2																																
CO 10	Ring in Day 2																																
CO 9	Ring in Day 2																																
CO 8	Ring in Day 2																																
CO 7	Ring in Day 2																																
CO 6	Ring in Day 2																																
CO 5	Ring in Day 2																																
CO 4	Ring in Day 2																																
CO 3	Ring in Day 2																																
CO 2	Ring in Day 2																																
CO 1	Ring in Day 2																																

KEY/LED	Feature	Station Number																																						
		42	43	44	45	46	47	48	49	50	51	52	53	54	55	56	57	58	59	60	61	62	63	64	65															
CO 21	Ring in Day 2																																							
CO 20	Ring in Day 2																																							
CO 19	Ring in Day 2																																							
CO 18	Ring in Day 2																																							
CO 17	Ring in Day 2																																							
CO 16	Ring in Day 2																																							
CO 15	Ring in Day 2																																							
CO 14	Ring in Day 2																																							
CO 13	Ring in Day 2																																							
CO 12	Ring in Day 2																																							
CO 11	Ring in Day 2																																							
CO 10	Ring in Day 2																																							
CO 9	Ring in Day 2																																							
CO 8	Ring in Day 2																																							
CO 7	Ring in Day 2																																							
CO 6	Ring in Day 2																																							
CO 5	Ring in Day 2																																							
CO 4	Ring in Day 2																																							
CO 3	Ring in Day 2																																							
CO 2	Ring in Day 2																																							
CO 1	Ring in Day 2																																							

X=select (LED on) Initialized Data: All LEDs off

NOTE:
Each line can ring on only eight stations. If more than eight are programmed, only the eight stations with the lowest station numbers will ring.

PROGRAM 9XX-CO RINGING ASSIGNMENTS-NITE

KEY/LED	Feature	Station Number																																
		10	11	12	13	14	15	16	17	18	19	20	21	22	23	24	25	26	27	28	29	30	31	32	33	34	35	36	37	38	39	40	41
CO 21	Ring in Nite																																
CO 20	Ring in Nite																																
CO 19	Ring in Nite																																
CO 18	Ring in Nite																																
CO 17	Ring in Nite																																
CO 16	Ring in Nite																																
CO 15	Ring in Nite																																
CO 14	Ring in Nite																																
CO 13	Ring in Nite																																
CO 12	Ring in Nite																																
CO 11	Ring in Nite																																
CO 10	Ring in Nite																																
CO 9	Ring in Nite																																
CO 8	Ring in Nite																																
CO 7	Ring in Nite																																
CO 6	Ring in Nite																																
CO 5	Ring in Nite																																
CO 4	Ring in Nite																																
CO 3	Ring in Nite																																
CO 2	Ring in Nite																																
CO 1	Ring in Nite																																

KEY/LED	Feature	Station Number																									
		42	43	44	45	46	47	48	49	50	51	52	53	54	55	56	57	58	59	60	61	62	63	64	65
CO 21	Ring in Nite																								
CO 20	Ring in Nite																								
CO 19	Ring in Nite																								
CO 18	Ring in Nite																								
CO 17	Ring in Nite																								
CO 16	Ring in Nite																								
CO 15	Ring in Nite																								
CO 14	Ring in Nite																								
CO 13	Ring in Nite																								
CO 12	Ring in Nite																								
CO 11	Ring in Nite																								
CO 10	Ring in Nite																								
CO 9	Ring in Nite																								
CO 8	Ring in Nite																								
CO 7	Ring in Nite																								
CO 6	Ring in Nite																								
CO 5	Ring in Nite																								
CO 4	Ring in Nite																								
CO 3	Ring in Nite																								
CO 2	Ring in Nite																								
CO 1	Ring in Nite																								

X=select (LED on) Initialized Data: Station 11, all LEDs on; all other LEDs off

NOTE:
Each line can ring on only eight stations. If more than eight are programmed, only the eight stations with the lowest station numbers will ring.

02.70 Initialization

02.71 STRATA has a list of standard system data assignments stored in ROM that can be entered anytime by initializing the system. The system must be initialized when it is first installed or whenever the MCAU is changed. This will allow the system to be tested and any faults to be corrected before time is spent on programming. Standard data assignments are listed in Table 3.

02.72 To initialize the STRATA system:

a) Make sure the power switch on the MPRU PCB is in the **ON** position.

b) Verify that the battery is connected on the AMMU (and CRDUs if equipped) to ensure that data entered after the system is initialized will not be lost due to power failure. The MCAU SET LED will not function if the battery on the AMMU is not connected.

c) Depress the **INT** switch on the MCAU, and hold it in.

d) Depress the **SET** switch and allow it to lock.

e) Depress and release the **SET** switch again.

f) Release the **INT** switch.

g) Cycle the MPRU power switch **OFF** and **ON**.

02.73 The Automatic Dialing memory will contain random numbers when the system is powered up initially. Therefore, it is necessary to clear the memory to prevent meaningless numbers from being dialed.

02.74 The Automatic Dialing features occupy the same basic system memory and up to three optional modules (see Table 2 for the possible CRDU locations). It is necessary to clear the basic system memory and, if applicable, the optional modules individually as follows:

a) Lock in the **SET** switch on the MCAU—the MCAU LED and the MW/FL LED on station 17 will go on.

b) Depress the [SPKR] key on station 17—SPKR LED will light steadily.

c) Dial [#] [*] [*] on dial pad—the SPKR LED will flash continuously.

d) Depress the following keys: [INT] [CO 4] [CO 8] [CO 12]—the corresponding LEDs will light steadily.

e) Depress the [HOLD] key—all station 17 LEDs (except MW/FL) will go off.

f) Release the **SET** switch on the MCAU—the MCAU LED and the MW/FL LED on station 17 will go off.

02.75 To clear first optional Automatic Dialing memory (CRDU on MCBU #1):

TABLE 2
CRDU POSITIONS

	None	MCBU #1	MDSU	MCBU #1 MDSU	MCBU #2	MCBU #1 MCBU #2	MCBU #1 MCBU #2 MDSU
System List	24 (60∿83)	40 (60∿99)	24 (60∿83)	40 (60∿99)	24 (60∿83)	40 (60∿99)	40 (60∿99)
Stations 10∿46*.	—	20 (10∿29)	20 (30∿49)	40 (10∿49)	—	20 (10∿29)	40 (10∿49)
Stations 47∿65	—	—	—	—	40 (10∿49)	40 (10∿49)	40 (10∿49)

**Stations 10∿41 for STRATA XII.*

NOTE:
The quantity of Automatic Dialing numbers (STRATA XII & XX) provided the system and stations by the available options are listed in Table 2. A CRDU is equipped on each PCB mentioned and the respective address codes are indicated in parenthesis.

2.40 Initialization

02.41 STRATA has a list of standard system data assignments stored in ROM that can be entered anytime by initializing the system. The system must be initialized when it is first installed or whenever the MCAU is changed. This will allow the system to be tested and any faults to be corrected before time is spent on programming. Standard data assignments are listed in Table 3.

02.42 To initialize the STRATA system:

a) Make sure the power switch on the MPRU PCB is in the **ON** position.

b) Verify that the battery is connected on the AMMU (and CRDUs if equipped) to ensure that data entered after the system is initialized will not be lost due to power failure. The MCAU SET LED will not function if the battery on the AMMU is not connected.

c) Depress the **INT** switch on the MCAU, and hold it in.

d) Depress the **SET** switch and allow it to lock.

e) Depress and release the **SET** switch again.

f) Release the **INT** switch.

g) Cycle the MPRU power switch **OFF** and **ON**.

02.43 The Automatic Dialing memory will contain random numbers when the system is powered up initially. Therefore, it is necessary to clear the memory to prevent meaningless numbers from being dialed.

02.44 The Automatic Dialing features occupy the same basic system memory and up to three optional modules. It is necessary to clear the basic system memory and, if applicable, the optional modules individually as follows:

1. Lock in the **SET** switch on the MCAU--the MCAU LED and the MW/FL LED on station 17 will be on.
2. Depress the [SPKR] key on station 17--SPKR LED will be on steadily.
3. Dial [#][*][*] on dial pad--the SPKR LED will flash continuously.
4. Operate the following keys: [INT][CO 4][CO 8][CO 12]--the corresponding LEDs will light steadily.
5. Depress the [HOLD] key--all station 17 LEDs (except MW/FL) will go off.
6. Release the **SET** switch on the MCAU--the MCAU LED and the MW/FL LED on station 17 will go off.

02.45 To clear the basic optional Automatic Dialing memory (CRDU #1 on MCBU #1):

1. Lock in the **SET** switch on the MCAU--the MCAU LED and the MW/FL LED on station 17 will go on.

PROGRAM 9XX-CO RINGING ASSIGNMENTS-NITE

KEY/LED	Feature	Station No. 10	11	12	13	14	15	16	17	18	19	20	21	22	23	24	25	26	27	28	29	30	31	32	33	34	35	36	37	38	39	40	41
CO 21	Ring in Nite																																
CO 20	Ring in Nite																																
CO 19	Ring in Nite																																
CO 18	Ring in Nite																																
CO 17	Ring in Nite																																
CO 16	Ring in Nite																																
CO 15	Ring in Nite																																
CO 14	Ring in Nite																																
CO 13	Ring in Nite																																
CO 12	Ring in Nite																																
CO 11	Ring in Nite																																
CO 10	Ring in Nite																																
CO 9	Ring in Nite																																
CO 8	Ring in Nite																																
CO 7	Ring in Nite																																
CO 6	Ring in Nite																																
CO 5	Ring in Nite																																
CO 4	Ring in Nite																																
CO 3	Ring in Nite																																
CO 2	Ring in Nite																																
CO 1	Ring in Nite																																

KEY/LED	Feature	Station No. 42	43	44	45	46	47	48	49	50	51	52	53	54	55	56	57	58	59	60	61	62	63	64	65
CO 21	Ring in Nite																								
CO 20	Ring in Nite																								
CO 19	Ring in Nite																								
CO 18	Ring in Nite																								
CO 17	Ring in Nite																								
CO 16	Ring in Nite																								
CO 15	Ring in Nite																								
CO 14	Ring in Nite																								
CO 13	Ring in Nite																								
CO 12	Ring in Nite																								
CO 11	Ring in Nite																								
CO 10	Ring in Nite																								
CO 9	Ring in Nite																								
CO 8	Ring in Nite																								
CO 7	Ring in Nite																								
CO 6	Ring in Nite																								
CO 5	Ring in Nite																								
CO 4	Ring in Nite																								
CO 3	Ring in Nite																								
CO 2	Ring in Nite																								
CO 1	Ring in Nite																								

X = select (LED on) Initialized Data: Sta. 11, all LEDs on; all other LEDs off

NOTE:
Each line can ring on only eight stations. If more than eight are programmed, only the eight stations with the lowest station numbers will ring.

a) Lock in the SET switch on the MCAU—the MCAU LED and the MW/FL LED on station 17 will go on.

b) Depress the [SPKR] key on station 17—SPKR LED will light steadily.

c) Dial [#] [*] [1] on the dial pad—SPKR LED will flash continuously.

d) Depress the following keys: [CO 1] [CO 5] [CO 9] [CO 13]—the corresponding LEDs will light steadily.

e) Depress the [HOLD] key—all station 17 LEDs (except MW/FL) will go off.

f) Release the SET switch on the MCAU—the MCAU LED and the MW/FL LED on station 17 will go off.

02.76 To clear second optional Automatic Dialing memory (CRDU on MDSU):

a) Lock in the SET switch on the MCAU—the MCAU LED and the MW/FL LED on station 17 will go on.

b) Depress the [SPKR] key on station 17—SPKR LED will light steadily.

c) Dial [#] [*] [2] on the dial pad—SPKR LED will flash continuously.

d) Depress the following keys: [CO 2] [CO 6] [CO 10] [CO 14]—the corresponding LEDs will light steadily.

e) Depress the [HOLD] key—all station 17 LEDs (except MW/FL) will go off.

f) Release the SET switch on the MCAU—the MCAU LED and the MW/FL LED on station 17 will go off.

02.77 To clear third optional Automatic Dialing memory (CRDU on MCBU #2):

a) Lock in the SET switch on the MCAU— the MCAU LED and the MW/FL LED on station 17 will go on.

b) Depress the [SPKR] key on station 17—SPKR LED will light steadily.

c) Dial [#] [*] [3] on the dial pad—SPKR LED will flash continuously.

d) Depress the following keys: [CO 3] [CO 7] [CO 11] [CO 15]—the corresponding LEDs will light steadily.

e) Depress the [HOLD] key—all station 17 LEDs (except MW/FL) will go off.

f) Release the SET switch on the MCAU— the MCAU LED and the MW/FL LED on station 17 will go off.

02.80 System Data Entry

02.81 System Data is entered via station 17 while the system is in the "Programming Mode".

02.82 The system is placed in the Programming Mode by locking in the SET switch on the MCAU. The MCAU LED and MW/FL LED on station 17 will light while the system is in the programming mode.

02.83 Once the system is in the programming mode, refer to the System Record Sheet for the changes that must be made and select the required program number. Refer to the proper table for detailed instructions for using each different program. Each program should be accomplished sequentially until all necessary changes are made.

TABLE 3

INITIALIZED DATA

SYSTEM OPTIONS

System Assignments (Basic): 01 Program
- Pause Timing After Flash = 1.5-seconds
- Pause After Flash = None
- Pause Timing After PBX Access Code = 1.5-seconds
- Flash Key Timing = 2 seconds
- Intercom Signalling = Voice first

System Assignments (Options): 02 Program
- Stations 24 & 25 are OPX
- Stations 22 & 23 are OPX
- Stations 20 & 21 are OPX
- Night Ringing = excluded from External Page
- Background Music = excluded from External Page
- External Page = not included in All Call Page

System Assignments (Options): 03 Program
Station 10 DND/Nite Key = Nite key
Ringing Modes = 2
Tenant Service = Not equipped
DSS Console Signalling = Voice first
Message Waiting Center Station 12 = Not equipped
Message Waiting Center Station 11 = Not equipped
Message Waiting Center Station 10 = Equipped
DSS #2 = Not equipped
DSS #1 = Equipped

MCOU Outpulsing Selection: 04 Program
DTMF = Equipped

Automatic Recall From Hold Timing: 05 Program
32 Seconds

CO LINE OPTIONS

Automatic Release On Hold Enable: 06 Program
Disabled = all CO lines

Automatic Release On Hold Timing: 07 Program
ESS Timing = all CO lines

Tenant Service Selection: 08 Program
Tenant #1 = all CO lines

CO Line "Dial 9" Group Selection: 09 Program
Enable = all CO lines

PBX Backup: 10 Program
CO Operation = all CO lines

PBX Access Codes: 1X Program
No Codes Assigned

Toll Restriction Disable: 20 Program
Toll Restriction = all CO lines (ineffective if Program 6XX not utilized)

Toll Restriction Exception Codes: 2X Program
No Codes Assigned

STATION OPTIONS

Station CO Line Access: 3XX Program
Access Allowed = all lines, all stations

Station Key Assignment: 4XX Program
Assignment #1 20-key EKT = all stations

Station Class of Service: 5XX Program
Privacy Override = not allowed all stations
DND Override = not allowed all stations
Group Page D = not included
Group Page C = not included
Group Page B = not included
Group Page A = not included
Speakerphones = allowed all stations
Automatic Dialing = allowed all stations
Automatic Line Preference = enable all stations
All Call = include all stations

Toll Restriction Classification: 6XX Program
No Restrictions = all stations

Station Outgoing Restrictions: 7XX Program
No Restrictions = all stations

CO Ringing Assignments-Day: 8XX Program
All CO lines ring station 10

CO Ringing Assignments-Day 2: 8#XX Program
No CO ringing assigned

CO Ringing Assignments-Nite: 9XX Program
All CO lines ring station 11

02.84 The table numbers for the various programs are listed below:

TABLE LIST

Table	Title	Program	Page
4	System Data Printout Codes	—	26
5	Speed Dial Memory Printout Selection Codes	—	27
6	System Assignments (Basic)	01	32
7	System Assignments (Options)	02	33
8	System Assignments (Options)	03	34
9	MCOU MF/DP Outpulsing Selection	04	35
10	Automatic Recall from Hold Timing	05	36
11	AROH Enable	06	37
12	AROH Timing	07	38
13	Tenant Service Selection	08	39
14	CO Line "Dial 9" Group Selection	09	40
15	PBX Backup	10	41
16	PBX Access Codes	1X	42
17	Toll Restriction Disable	20	43
18	Toll Restriction Exception Codes	2X	44
19	Station CO Access	3XX	45
20	Station Type & Flexible Key Assignment	4XX	46
21	Station Class of Service	5XX	47
22	Toll Restriction Classification	6XX	48
23	Station Outgoing Restriction	7XX	49
24	CO Ringing Assignments—Day	8XX	50
25	CO Ringing Assignments—Day 2	8#XX	51
26	CO Ringing Assignments—Nite	9XX	52

03 SYSTEM DATA PRINTOUT

03.00 System Data Printout Via SMDR

03.01 If the STRATA system is equipped with an MSMU (SMDR) PCB, it is possible to obtain a printout of the system data and speed dialing memory via a printer that is connected to the SMDR output port.

03.02 The data printout should be done during a low traffic period since this procedure interferes with normal SMDR output. Any call records generated during a printout will be lost.

03.03 Commands to print system data are entered by station 17 while it is in the programming mode. It is possible to print out all or parts of the system data and speed dial memory. The possible choices are:

System Data:
- 1 = All data
- 2 = Programs 01 through 09
- 3 = Programs 10 and 1X
- 4 = Programs 20 and 2X
- 5 = Program 3XX
- 6 = Program 4XX
- 7 = Program 5XX
- 8 = Program 6XX
- 9 = Program 7XX
- 10 = Program 8XX
- 11 = Program 8#XX
- 12 = Program 9XX

Speed Dial Memory:
- 1 = All data
- 2 = System list
- 3 = Any individual station list

03.04 To request a printout:

a) Depress the SET switch on the MCAU:
- SET LED = on
- Station 17 MW/FL LED = on

b) Depress the [SPKR] key on station 17:
- SPKR LED = on

c) Dial [#] [#] :
- SPKR LED = flash

d) INT and CO 1~8 LEDs will switch on and off in response to operations of the associated keys. Refer to Tables 4 & 5 and set the INT and CO 1~8 LEDs to the proper pattern for the printout required.

e) Depress the [HOLD] key:
- SPKR LED = off
- INT & CO LEDs = off
- Printout will begin (see Figures 2 ~ 6 for examples of the printout format).

f) Normal SMDR operation will return when the printout is complete.

g) Repeat from step b until all printouts have been obtained.

h) Release the **SET** switch on the MCAU.

03.05 To stop a printout before it is complete:

a) Depress the [SPKR] key:
- SPKR LED = on

b) Dial [#] [#] :
- SPKR LED = on
- LEDs illuminated in the above step d will light

c) Depress the appropriate [INT] and/or [CO] keys necessary to extinguish all LEDs.

d) Depress the [HOLD] key:
- SPKR LED = off
- Printout will stop after a short delay

e) Normal SMDR functions will return.

TABLE 4

SYSTEM DATA PRINTOUT SELECTION CODES

PROGRAM NUMBER

LED	01 — 09	10 & 1X	20 & 2X	3XX	4XX	5XX	6XX	7XX	8XX	8#XX	9XX	Print out all
CO 8	X	X	X	X	X	X	X	X	X	X	X	X
CO 7	X	X	X	X	X	X	X	X	X	X	X	X
CO 6	X	X	X	X	X	X	X	X	X	X	X	X
CO 5	0	0	0	0	0	0	0	0	0	0	0	0
CO 4	0	0	0	0	0	0	0	0	0	0	0	0
CO 3	0	0	0	0	0	0	0	0	X	X	X	X
CO 2	0	0	0	0	X	X	X	X	0	0	0	X
CO 1	0	0	X	X	0	0	X	X	0	X	0	X
INT	0	X	0	X	0	X	0	X	0	0	X	X

LED on=X LED off=0

TABLE 5

SPEED DIAL MEMORY PRINTOUT SELECTION CODES

SPEED DIAL LISTS

LED	SYS	#10	#11	#12	#13	#14	#15	#16	#17	#18	#19
CO 8	X	X	X	X	X	X	X	X	X	X	X
CO 7	0	0	0	0	0	0	0	0	0	0	0
CO 6	X	0	0	0	0	0	0	0	0	0	0
CO 5	X	0	0	0	0	0	0	0	0	0	0
CO 4	X	X	X	X	X	X	X	X	X	X	X
CO 3	0	0	0	0	0	0	0	0	0	X	X
CO 2	0	0	0	0	0	X	X	X	X	0	0
CO 1	0	0	0	X	X	0	0	X	X	0	0
INT	0	0	X	0	X	0	X	0	X	0	X

LED on=X LED off=0

SPEED DIAL LISTS (Stations 20-29)

LED	#20	#21	#22	#23	#24	#25	#26	#27	#28	#29
CO 8	X	X	X	X	X	X	X	X	X	X
CO 7	0	0	0	0	0	0	0	0	0	0
CO 6	0	0	0	0	0	0	0	0	0	0
CO 5	X	X	X	X	X	X	X	X	X	X
CO 4	0	0	0	0	0	0	0	0	0	0
CO 3	0	0	0	0	0	0	0	0	X	X
CO 2	0	0	0	0	X	X	X	X	0	0
CO 1	0	0	X	X	0	0	X	X	0	0
INT	0	X	0	X	0	X	0	X	0	X

LED on=X LED off=0

SPEED DIAL LISTS (Stations 30-39)

LED	#30	#31	#32	#33	#34	#35	#36	#37	#38	#39
CO 8	X	X	X	X	X	X	X	X	X	X
CO 7	0	0	0	0	0	0	0	0	0	0
CO 6	0	0	0	0	0	0	0	0	0	0
CO 5	X	X	X	X	X	X	X	X	X	X
CO 4	X	X	X	X	X	X	X	X	X	X
CO 3	0	0	0	0	0	0	0	0	X	X
CO 2	0	0	0	0	X	X	X	X	0	0
CO 1	0	0	X	X	0	0	X	X	0	0
INT	0	X	0	X	0	X	0	X	0	X

LED on=X LED off=0

SPEED DIAL LISTS (Stations 40-49)

LED	#40	#41	#42	#43	#44	#45	#46	#47	#48	#49
CO 8	X	X	X	X	X	X	X	X	X	X
CO 7	0	0	0	0	0	0	0	0	0	0
CO 6	X	X	X	X	X	X	X	X	X	X
CO 5	0	0	0	0	0	0	0	0	0	0
CO 4	0	0	0	0	0	0	0	0	0	0
CO 3	0	0	0	0	0	0	0	0	X	X
CO 2	0	0	0	0	X	X	X	X	0	0
CO 1	0	0	X	X	0	0	X	X	0	0
INT	0	X	0	X	0	X	0	X	0	X

LED on=X LED off=0

SPEED DIAL LISTS (Stations 50-59)

LED	#50	#51	#52	#53	#54	#55	#56	#57	#58	#59
CO 8	X	X	X	X	X	X	X	X	X	X
CO 7	0	0	0	0	0	0	0	0	0	0
CO 6	X	X	X	X	X	X	X	X	X	X
CO 5	0	0	0	0	0	0	0	0	0	0
CO 4	X	X	X	X	X	X	X	X	X	X
CO 3	0	0	0	0	0	0	0	0	X	X
CO 2	0	0	0	0	X	X	X	X	0	0
CO 1	0	0	X	X	0	0	X	X	0	0
INT	0	X	0	X	0	X	0	X	0	X

LED on=X LED off=0

SPEED DIAL LISTS (Stations 60-65)

LED	#60	#61	#62	#63	#64	#65	All Output
CO 8	X	X	X	X	X	X	X
CO 7	0	0	0	0	0	0	0
CO 6	X	X	X	X	X	X	0
CO 5	X	X	X	X	X	X	0
CO 4	0	0	0	0	0	0	0
CO 3	0	0	0	0	0	0	0
CO 2	0	0	0	0	X	X	0
CO 1	0	0	X	X	0	0	0
INT	0	X	0	X	0	X	0

LED on=X LED off=0

```
## SYSTEM PROGRAMMING    ##

                                                  1:SELECT (LED ON)
          21    16 15       8  7       1INT
0    1     000000  00000000  00000000
0    2     000000  00000000  00000000
0    3     000000  00000000  00000101
0    4     000000  00000000  00000000
0    5     000000  00000000  00000100
0    6     000000  00000000  00000000
0    7     000000  00000000  00000000
0    8     000000  00000000  00000000
0    9     111111  11111111  11111110

## END OF PRINT              ##
```

FIGURE 2—SAMPLE OF PRINTOUT FOR PROGRAMS 01 ~ 09

```
## SYSTEM PROGRAMMING    ##

                                                  1:SELECT (LED ON)
          21    16 15       8  7       1INT
1    0     000000  00000000  00000000

                    (DATA = DIAL NUMBER)
1    1     91
1    2     85
1    3
1    4
1    5
1    6
1    7
1    8

## END OF PRINT              ##
```

FIGURE 3—SAMPLE PRINTOUT OF PROGRAMS 10 & 1X

```
## SYSTEM PROGRAMMING    ##

                                                  1:SELECT (LED ON)
          21    16 15       8  7       1INT
2    0     000000  00000000  00000000

                    (DATA = DIAL NUMBER)
2    1     1234
2    2     5678
2    3
2    4
2    5

## END OF PRINT              ##
```

FIGURE 4—SAMPLE PRINTOUT OF PROGRAMS 20 & 2X

SYSTEM PROGRAMMING

1:SELECT (LED ON)

		21 16	15 8	7 1INT
3	10	111111	11111111	11111110
3	11	111111	11111111	11111110
3	12	111111	11111111	11111110
3	13	111111	11111111	11111110
3	14	111111	11111111	11111110
3	15	111111	11111111	11111110
3	16	111111	11111111	11111110
3	17	111111	11111111	11111110
3	18	111111	11111111	11111110
3	19	111111	11111111	11111110
3	20	111111	11111111	11111110
3	21	111111	11111111	11111110
3	22	111111	11111111	11111110
3	23	111111	11111111	11111110
3	24	111111	11111111	11111110
3	25	111111	11111111	11111110
3	26	111111	11111111	11111110
3	27	111111	11111111	11111110
3	28	111111	11111111	11111110
3	29	111111	11111111	11111110
3	30	111111	11111111	11111110
3	31	111111	11111111	11111110
3	32	111111	11111111	11111110
3	33	111111	11111111	11111110
3	34	111111	11111111	11111110
3	35	111111	11111111	11111110
3	36	111111	11111111	11111110
3	37	111111	11111111	11111110
3	38	111111	11111111	11111110
3	39	111111	11111111	11111110
3	40	111111	11111111	11111110
3	41	111111	11111111	11111110

FIGURE 5

SAMPLE PRINTOUT OF PROGRAM 3XX (Stations 10 ~ 41)

(continued on next page)

(System Programming Continued)

MM/DD/YY

3	42	111111	11111111	11111110
3	43	111111	11111111	11111110
3	44	111111	11111111	11111110
3	45	111111	11111111	11111110
3	46	111111	11111111	11111110
3	47	111111	11111111	11111110
3	48	111111	11111111	11111110
3	49	111111	11111111	11111110
3	50	111111	11111111	11111110
3	51	111111	11111111	11111110
3	52	111111	11111111	11111110
3	53	111111	11111111	11111110
3	54	111111	11111111	11111110
3	55	111111	11111111	11111110
3	56	111111	11111111	11111110
3	57	111111	11111111	11111110
3	58	111111	11111111	11111110
3	59	111111	11111111	11111110
3	60	111111	11111111	11111110
3	61	111111	11111111	11111110
3	62	111111	11111111	11111110
3	63	111111	11111111	11111110
3	64	111111	11111111	11111110
3	65	111111	11111111	11111110

END OF PRINT

FIGURE 5A

SAMPLE PRINTOUT OF PROGRAM 3XX (Stations 42 ~ 65)

REPERTORY DIAL

#00	*60	17147305000
#00	*61	19142731750
#00	*62	12135551212
#00	*63	17148531212
#00	*64	17145551212
#00	*65	17147305000
#00	*66	19142731750
#00	*67	12135551212
#00	*68	17148531212
#00	*69	17145551212
#00	*70	17147305000
#00	*71	19142731750
#00	*72	12135551212
#00	*73	17148531212
#00	*74	17145551212
#00	*75	17147305000
#00	*76	19142731750
#00	*77	12135551212
#00	*78	17148531212
#00	*79	17145551212
#00	*80	17147305000
#00	*81	19142731750
#00	*82	12135551212
#00	*83	17148531212
#00	*84	17145551212
#00	*85	17147305000
#00	*86	19142731750
#00	*87	12135551212
#00	*88	17148531212
#00	*89	17145551212
#00	*90	17147305000
#00	*91	19142731750
#00	*92	12135551212
#00	*93	17148531212
#00	*94	17145551212
#00	*95	17147305000
#00	*96	19142731750
#00	*97	12135551212
#00	*98	17148531212
#00	*99	17145551212

END OF PRINT

FIGURE 6
SAMPLE PRINTOUT OF SPEED DIAL-SYSTEM

TABLE 6
PROGRAM 01—SYSTEM ASSIGNMENTS (BASIC)

1. Operate **SET** switch on MCAU	LED on MCAU on Station 17 MW/FL LED on System is in program mode Normal functions halt on Station 17 .
2. Operate [SPKR] key on Station 17	SPKR LED steady on
3. Dial [0] [1] on dial pad	SPKR LED flashes continuously INT & CO LEDs will be on according to present data
4. Refer to the System Record Sheet. Using the [INT] and [CO] keys, turn the associated LEDs on or off, as required. The detailed meaning of each key/LED is shown below.	An X on the record sheet means the LED should be on If the LED is already on, pushing the associated key will turn it off and vice-versa LEDs may be turned off and on until the desired pattern is set

NOTE:
If any key/LED is not shown, it is not used.

Feature	Key/LED	Data Meaning	
		LED on	LED off
Pause Timing (After Flash)	CO 5	3.0 sec.	1.5 sec.
Pause After Flash	CO 4	Yes	No
Pause Timing (After PBX Acc Code)	CO 3	3.0 sec.	1.5 sec.
Flash Key Timing	CO 2	0.5 sec.	2.0 sec.
Not used	CO 1	–	–
Intercom Signalling	INT	Tone First	Voice First

5. Operate the [HOLD] key to place new data in memory.	All Station 17 LEDs (except MW/FL) go off
6A. Go to Step 2 in another program table . . . or . . . 6B. Transfer data into working memory per Paragraph **02.06**	LED on MCAU goes off Station 17 MW/FL LED goes off New data is stored, previous data is erased

TABLE 7
PROGRAM 02—SYSTEM ASSIGNMENTS (OPTIONS)

1. Operate **SET** switch on MCAU	LED on MCAU on Station 17 MW/FL LED on System is in program mode Normal functions halt on Station 17
2. Operate [SPKR] key on Station 17	SPKR LED steady on
3. Dial [0] [2] on dial pad	SPKR LED flashes continuously INT & CO LEDs will be on according to present data
4. Refer to the System Record Sheet. Using the [INT] and [CO] keys, turn the associated LEDs on or off, as required. The detailed meaning of each key/LED is shown below.	An X on the record sheet means the LED should be on If the LED is already on, pushing the associated key will turn it off and vice-versa LEDs may be turned off and on until the desired pattern is set

NOTE:
If any key/LED is not shown, it is not used.

Feature	Key/LED	Data Meaning	
		LED on	LED off
Station 24/25 OPX	CO 10	24 only	24 & 25
Station 22/23 OPX	CO 9	22 only	22 & 23
Station 20/21 OPX	CO 8	20 only	20 & 21
Nite Ring over External Page	CO 2	Yes	No
BGM over External Page	CO 1	Yes	No
External Page with All Call	INT	Yes	No

5. Operate the [HOLD] key to place new data in memory.	All Station 17 LEDs (except MW/FL) go off
6A. Go to Step 2 in another program table . . . or . . . 6B. Transfer data into working memory per Paragraph **02.06**	LED on MCAU goes off Station 17 MW/FL LED goes off New data is stored, previous data is erased

TABLE 8

PROGRAM 03 – SYSTEM ASSIGNMENTS (OPTIONS)

1. Operate SET switch on MCAU	LED on MCAU on Station 17 MW/FL LED on System is in program mode Normal functions halt on Station 17
2. Operate [SPKR] key on Station 17	SPKR LED steady on
3. Dial [0] [3] on dial pad	SPKR LED flashes continuously INT & CO LEDs will be on according to present data
4. Refer to the System Record Sheet. Using the [INT] and [CO] keys, turn the associated LEDs on or off, as required. The detailed meaning of each key/LED is shown below.	An X on the record sheet means the LED should be on If the LED is already on, pushing the associated key will turn it off and vice-versa LEDs may be turned off and on until the desired pattern is set

NOTE:
If any key/LED is not shown, it is not used.

Feature	Key/LED	Data Meaning	
		LED on	LED off
Station 10 DND/Nite Key	CO 9	DND	Nite
Ringing Modes	CO 8	3 Modes	2 Modes
Tenant Service	CO 7	Yes	No
DSS Signalling	CO 6	Tone First	Voice First
Not Used	CO 5	–	–
Message Waiting Station 12	CO 4	Yes	No
Message Waiting Station 11	CO 3	Yes	No
Message Waiting Station 10	CO 2	Yes	No
DSS #2 Equipped (Station 11)	CO 1	Yes	No
DSS #1 Equipped (Station 10)	INT	Yes	No

5. Operate the [HOLD] key to place new data in memory.	All Station 17 LEDs (except MW/FL) go off
6A. Go to Step 2 in another program table . . . or . . . 6B. Transfer data into working memory per Paragraph 02.06	LED on MCAU goes off Station 17 MW/FL LED goes off New data is stored, previous data is erased

TABLE 9

PROGRAM 04—MCOU OUTPULSING SELECTION

1. Operate **SET** switch on MCAU	LED on MCAU on Station 17 MW/FL LED on System is in program mode Normal functions halt on Station 17
2. Operate [SPKR] key on Station 17	SPKR LED steady on
3. Dial [0] [4] on dial pad To program CO 18∼21, dial [0] [*] [4], then CO 1∼4 = CO 18∼21.	SPKR LED flashes continuously CO LEDs will be on according to present data
4. Refer to the System Record Sheet. CO keys are divided into groups of three (CO 1∼3 = Group 1, CO 4∼6 = Group 2, etc). *Any* one key in the group can be used to control *all* three LEDs in the group. For example: If CO 1∼3 LEDs are "on", depressing CO key 1, 2 or 3 will turn off all three LEDs. If the LEDs are on, DP will be outpulsed. If the LEDs are off, DTMF will be utilized.	An X on the record sheet means the LED should be on If the LEDs are already on, pushing the associated key will turn them off and vice-versa LEDs may be turned off and on until the desired pattern is set
5. Operate the [HOLD] key to place new data in memory.	All Station 17 LEDs (except MW/FL) go off
6A. Return to Step 2 in order to continue with this program . . . or . . . 6B. Go to Step 2 in another program table . . . or . . . 6C. Transfer data into working memory per Paragraph **02.06**	LED on MCAU goes off Station 17 MW/FL LED goes off New data is stored, previous data is erased

TABLE 10

PROGRAM 05—AUTOMATIC RECALL FROM HOLD TIMING

1. Operate **SET** switch on MCAU	LED on MCAU on Station 17 MW/FL LED on System is in program mode Normal functions halt on Station 17
2. Operate [SPKR] key on Station 17	SPKR LED steady on
3. Dial [0] [5] on dial pad	SPKR LED flashes continuously INT or CO LED will be on according to present data
4. Refer to the System Record Sheet. Using an [INT] or [CO] key, turn its associated LED on as required. The detailed meaning of each key/LED is shown below.	An X on the record sheet means the LED should be on Only one LED is permitted to be on, pushing another key will turn that LED on and turn off the previous LED

NOTE:
If any key/LED is not shown, it is not used.

KEY/LED	TIME
CO 7	160 seconds
CO 6	128 seconds
CO 5	96 seconds
CO 4	64 seconds
CO 3	48 seconds
CO 2	32 seconds
CO 1	16 seconds
INT	No Recall

5. Operate the [HOLD] key to place new data in memory.	All Station 17 LEDs (except MW/FL) go off
6A. Go to Step 2 in another program table . . . or . . . 6B. Transfer data into working memory per Paragraph **02.06**	LED on MCAU goes off Station 17 MW/FL LED goes off New data is stored, previous data is erased

TABLE 11
PROGRAM 06—AUTOMATIC RELEASE ON HOLD ENABLE

1. Operate **SET** switch on MCAU	LED on MCAU on Station 17 MW/FL LED on System is in program mode Normal functions halt on Station 17
2. Operate [SPKR] key on Station 17	SPKR LED steady on
3. Dial [0] [6] on dial pad To program CO 18∼21, dial [0] [*] [6], then CO 1∼4 = CO 18∼21.	SPKR LED flashes continuously CO LEDs will be on according to present data
4. Refer to the System Record Sheet. Using the [CO] keys, turn the associated LEDs on or off, as required. Each CO key/LED represents itself—that is, if CO 1 LED is on, CO 1 will have the AROH function during normal operation. If CO 1 LED is off, AROH will not function on that line.	An X on the record sheet means the LED should be on If the LED is already on, pushing the associated key will turn it off and vice-versa LEDs may be turned off and on until the desired pattern is set
5. Operate the [HOLD] key to place new data in memory.	All Station 17 LEDs (except MW/FL) go off
6A. Return to Step 2 in order to continue with this program . . . or . . . 6B. Go to Step 2 in another program table . . . or . . . 6C. Transfer data into working memory per Paragraph **02.06**	LED on MCAU goes off Station 17 MW/FL LED goes off New data is stored, previous data is erased

TABLE 12

PROGRAM 07—AUTOMATIC RELEASE ON HOLD (AROH) TIMING

1. Operate **SET** switch on MCAU	LED on MCAU on Station 17 MW/FL LED on System is in program mode Normal functions halt on Station 17
2. Operate [SPKR] key on Station 17	SPKR LED steady on
3. Dial [0] [7] on dial pad To program CO 18∼21, dial [0] [*] [7], then CO 1∼4 = CO 18∼21.	SPKR LED flashes continuously CO LEDs will be on according to present data
4. Refer to the System Record Sheet. Using the [CO] keys, turn the associated LEDs on or off, as required. Each CO key/LED represents itself—that is, if CO 1 LED is on, CO 1 will use XB (crossbar) timing for AROH. If CO 1 LED is off, ESS timing will be used on that line.	An X on the record sheet means the LED should be on If the LED is already on, pushing the associated key will turn it off and vice-versa LEDs may be turned off and on until the desired pattern is set
5. Operate the [HOLD] key to place new data in memory.	All Station 17 LEDs (except MW/FL) go off
6A. Return to Step 2 in order to continue with this program . . . or . . . 6B. Go to Step 2 in another program table . . . or . . . 6C. Transfer data into working memory per Paragraph **02.06**	LED on MCAU goes off Station 17 MW/FL LED goes off New data is stored, previous data is erased

NOTE:
This program will have no meaning unless AROH is enabled via Program 06.

TABLE 13

PROGRAM 08—TENANT SERVICE SELECTION

1. Operate **SET** switch on MCAU	LED on MCAU on Station 17 MW/FL LED on System is in program mode Normal functions halt on Station 17
2. Operate [SPKR] key on Station 17	SPKR LED steady on
3. Dial [0] [8] on dial pad To program CO 18∼21, dial [0] [*] [8], then CO 1∼4 = CO 18∼21.	SPKR LED flashes continuously CO LEDs will be on according to present data
4. Refer to the System Record Sheet. Using the [CO] keys, turn the associated LEDs on or off, as required. Each CO key/LED represents itself—that is, if CO 1 LED is on, CO 1 will belong to tenant #2. If CO 1 LED is off, CO 1 will belong to tenant #1.	An X on the record sheet means the LED should be on If the LED is already on, pushing the associated key will turn it off and vice-versa LEDs may be turned off and on until the desired pattern is set
5. Operate the [HOLD] key to place new data in memory.	All Station 17 LEDs (except MW/FL) go off
6A. Return to Step 2 in order to continue with this program . . . or . . . 6B. Go to Step 2 in another program table . . . or . . . 6C. Transfer data into working memory per Paragraph **02.06**	LED on MCAU goes off Station 17 MW/FL LED goes off New data is stored, previous data is erased

NOTE:
This program will have no meaning unless Tenant Service was selected in Program 03.

TABLE 14

PROGRAM 09—CO LINE "DIAL 9" GROUP SELECTION

1. Operate **SET** switch on MCAU	LED on MCAU on Station 17 MW/FL LED on System is in program mode Normal functions halt on Station 17
2. Operate [SPKR] key on Station 17	SPKR LED steady on
3. Dial [0] [9] on dial pad To program CO 18~21, dial [0] [*] [9], then CO 1~4 = CO 18~21.	SPKR LED flashes continuously CO LEDs will be on according to present data
4. Refer to the System Record Sheet. Using the [CO] keys, turn the associated LEDs on or off, as required. Each CO key/LED represents itself—that is, if CO 1 LED is on, CO 1 will be included in the "Dial 9" Group for random selection by a single line (OPX) extension. If CO 1 LED is off, CO 1 can be accessed only by dialing [7] [0] [1] at the OPX extension.	An X on the record sheet means the LED should be on If the LEDs are already on, pushing the associated key will turn them off and vice-versa LEDs may be turned off and on until the desired pattern is set
5. Operate the [HOLD] key to place new data in memory.	All Station 17 LEDs (except MW/FL) go off
6A. Return to Step 2 in order to continue with this program . . . or . . . 6B. Go to Step 2 in another program table . . . or . . . 6C. Transfer data into working memory per Paragraph **02.06**	LED on MCAU goes off Station 17 MW/FL LED goes off New data is stored, previous data is erased

TABLE 15

PROGRAM 10—PBX BACK-UP

1. Operate SET switch on MCAU	LED on MCAU on Station 17 MW/FL LED on System is in program mode Normal functions halt on Station 17
2. Operate [SPKR] key on Station 17	SPKR LED steady on
3. Dial [1] [0] on dial pad To program CO 18∼21, dial [1] [*] [0], then CO 1∼4 = CO 18∼21.	SPKR LED flashes continuously CO LEDs will be on according to present data
4. Refer to the System Record Sheet. Using the [CO] keys, turn the associated LEDs on or off, as required. Each CO key/LED represents itself—that is, if CO 1 LED is on, the system assumes that CO 1 line is connected to a PBX line and will cause features such as Toll Restriction and Automatic Dialing to function accordingly.	An X on the record sheet means the LED should be on If the LED is already on, pushing the associated key will turn it off and vice-versa LEDs may be turned off and on until the desired pattern is set
5. Operate the [HOLD] key to place new data in memory.	All Station 17 LEDs (except MW/FL) go off
6A. Return to Step 2 in order to continue with this program . . . or . . . 6B. Go to Step 2 in another program table . . . or . . . 6C. Transfer data into working memory per Paragraph **02.06**	 LED on MCAU goes off Station 17 MW/FL LED goes off New data is stored, previous data is erased

TABLE 16

PROGRAM 1X—PBX ACCESS CODES

1. Operate the SET switch on the MCAU	LED on MCAU on Station 17 MW/FL LED on System is in program mode Normal functions halt on Station 17.
2. Operate [SPKR] key on Station 17	SPKR LED steady on
3. Dial [1] [X] on the dial pad X = 1, 2, 3, 4, etc.—the system will store a maximum of 8 access codes. Dial [1] [1] (X=1) to program 1st access code; [1] [2] (X=2) to program the 2nd access code, etc.	SPKR LED flashes continuously CO 10 LED will flash
4. Refer to the System Record Sheet. Using the dial pad, enter the required access code (two digits must be entered) • If access code is a single digit, enter a [*] as the second digit • If all combinations following a particular 1st digit are to be considered access codes (e.g., 91, 92, 93, etc), operate the DND key (do not care) key for the second digit.	INT & CO 2, 4, & 6 LEDs will light to display data in Binary format CO 10 or 12 LED will light steadily to indicate which digit is being displayed

Key	Start	1st Digit	2nd Digit
CO 12			Steady
CO 10	Flash	Steady	
CO 8			
CO 6		Binary Data	Binary Data
CO 4		Binary Data	Binary Data
CO 2		Binary Data	Binary Data
INT		Binary Data	Binary Data

NOTE:
a) Depressing the [#] key displays the data without changing it. The first [#] will display the 1st digit; the second [#] will display the 2nd digit.
b) To clear existing data without entering a new number, depress [*] key two times.

Binary Numbers	1	2	3	4	5	6	7	8	9	0	DND
CO 6								X	X	X	X
CO 4				X	X	X	X				X
CO 2		X	X			X	X			X	
INT	X		X		X		X		X		X

X = LED on

All LEDs off = no data

5. Operate the [HOLD] key to place new data in memory.	All Station 17 LEDs (except MW/FL) go off
6A. Return to Step 2 in order to continue with this program . . . or . . . 6B. Go to Step 2 in another program table . . . or . . . 6C. Transfer data into working memory per Paragraph 02.06	LED on MCAU goes off Station 17 MW/FL LED goes off New data is stored, previous data is erased

TABLE 17

PROGRAM 20—TOLL RESTRICTION DISABLE

1. Operate **SET** switch on MCAU	LED on MCAU on Station 17 MW/FL LED on System is in program mode Normal functions halt on Station 17
2. Operate [SPKR] key on Station 17	SPKR LED steady on
3. Dial [2] [0] on dial pad To program CO 18~21, dial [2] [*] [0], then CO 1~4 = CO 18~21.	SPKR LED flashes continuously CO LEDs will be on according to present data
4. Refer to the System Record Sheet. Using the [CO] keys, turn the associated LEDs on or off, as required. Each CO key/LED represents itself—that is, if CO 1 LED is on, Toll Restriction will not function on CO 1. If CO 1 LED is off, Toll Restriction will function on CO 1, etc.	An X on the record sheet means the LED should be on If the LED is already on, pushing the associated key will turn it off and vice-versa LEDs may be turned off and on until the desired pattern is set
5. Operate the [HOLD] key to place new data in memory.	All Station 17 LEDs (except MW/FL) go off
6A. Return to Step 2 in order to continue with this program . . . or . . . 6B. Go to Step 2 in another program table . . . or . . . 6C. Transfer data into working memory per Paragraph **02.06**	LED on MCAU goes off Station 17 MW/FL LED goes off New data is stored, previous data is erased

TABLE 18

PROGRAM 2X—TOLL RESTRICTION EXCEPTION CODES

1. Operate the SET switch on the MCAU	LED on MCAU on Station 17 MW/FL LED on System is in program mode Normal functions halt on Station 17
2. Operate [SPKR] key on Station 17	SPKR LED steady on
3. Dial [2] [X] on the dial pad. X = 1, 2, 3, 4 or 5—the system will store a maximum of 5 access codes. Dial [2] [1] (X=1) to program 1st access code; [2] [2] (X=2) to program the 2nd access code, etc.	SPKR LED flashes continuously CO 10 LED will flash
4. Refer to the System Record Sheet. Using the dial pad, enter the 4-digit exception code (4 digits must be entered). • If less than 4 digits are used, enter [*] for remaining digits.	INT & CO 2, 4, & 6 LEDs will light to display data in Binary format CO 10, 12 or 14 LEDs will light steadily to indicate which digit is being displayed

KEY	Start	1st Digit	2nd Digit	3rd Digit	4th Digit
CO 14					Steady
CO 12			Steady	Steady	
CO 10	Flash	Steady		Steady	
CO 8					
CO 6		Binary Data	Binary Data	Binary Data	Binary Data
CO 4		Binary Data	Binary Data	Binary Data	Binary Data
CO 2		Binary Data	Binary Data	Binary Data	Binary Data
INT		Binary Data	Binary Data	Binary Data	Binary Data

NOTE:
a) Depressing the [#] key displays the data without changing it. The first [#] will display the 1st digit; the second [#] will display the 2nd digit, etc.
b) To clear existing data without entering a new number, depress [*] key four times.

Binary Numbers		1	2	3	4	5	6	7	8	9	0
	CO 6								X	X	X
	CO 4				X	X	X	X			
	CO 2		X	X			X	X			X
	INT	X		X		X		X		X	

X = LED on

ALL LEDs off = no data

5. Operate the [HOLD] key to place new data in memory.	All Station 17 LEDs (except MW/FL) go off
6A. Return to Step 2 in order to continue with this program . . . or . . . 6B. Go to Step 2 in another program table . . . or . . . 6C. Transfer data into working memory per Paragraph 02.06	LED on MCAU goes off Station 17 MW/FL LED goes off New data is stored, previous data is erased

TABLE 19

PROGRAM 3XX—STATION CO LINE ACCESS

1. Operate SET switch on the MCAU	LED on MCAU on Station 17 MW/FL LED on System is in program mode Normal functions halt on Station 17
2. Operate the [SPKR] key on Station 17	SPKR LED steady on
3. Dial [3] [X] [X] on the dial pad XX = the station number of the station to be programmed. To program CO 18~21, dial [3] [*] [X] [X], then CO 1~4 = CO 18~21. *NOTE:* *For multiple station programming, refer to Paragraph 02.22.*	SPKR LED flashes continuously CO LEDs will be on according to present data
4. Refer to the System Record Sheet. Using the CO keys, turn the associated LEDs on or off, as required. • LED on = Access allowed • Each CO key/LED represents itself—that is, if CO 1 LED is on, station being programmed ([X] [X]) is allowed access to CO 1.	An X on the record sheet means the LED should be on If the LED is already on, pushing the associated key will turn it off and vice-versa LEDs may be turned off and on until the desired pattern is set
5. Operate the [HOLD] key to place new data in memory.	All Station 17 LEDs (except MW/FL) go off
6A. Return to Step 2 in order to continue with this program . . . or . . . 6B. Go to Step 2 in another program table . . . or . . . 6C. Transfer data into working memory per Paragraph 02.06	LED on MCAU goes off Station 17 MW/FL LED goes off New data is stored, previous data is erased

TABLE 20

PROGRAM 4XX—STATION TYPE and KEY ASSIGNMENT

1. Operate the **SET** switch on the MCAU	LED on MCAU on Station 17 MW/FL LED on System is in program mode Normal functions halt on Station 17
2. Operate the [SPKR] key on Station 17	SPKR LED steady on
3. Dial [4] [X] [X] on the dial pad XX = the station number of the station to be programmed. *Note:* *For multiple station programming, refer to Paragraph 02.22.*	SPKR LED flashes continuously An INT or CO LED will be on according to present data
4. Refer to the System Record Sheet. Using the [INT] or [CO] key turn the associated LED on as required, depending upon the type and style of the telephone being used at that station. The detailed meaning of each key is shown below.	An X on the record sheet means the LED should be on Only one LED is permitted to be on for each station. Pushing a key will turn that LED on and turn off the previous LED

NOTE:
If any key/LED is not shown, it is not used. See Par. 02.37 for the definition of the assignment numbers.
If a station is equipped with a DSS (Program 03), key assign. 20-key #8 will be selected automatically.

KEY ASSIGN.	KEY	LED ON	LED OFF
10-key #5	CO 17	Equipped	Not equipped
10-key #4	CO 16	Equipped	Not equipped
10-key #3	CO 15	Equipped	Not equipped
10-key #2	CO 14	Equipped	Not equipped
10-key #1	CO 13	Equipped	Not equipped
20-key #13	CO 12	Equipped	Not equipped
20-key #12	CO 11	Equipped	Not equipped
20-key #11	CO 10	Equipped	Not equipped
20-key #10	CO 9	Equipped	Not equipped
20-key #9	CO 8	Equipped	Not equipped
20-key #8	CO 7	Equipped	Not equipped
20-key #7	CO 6	Equipped	Not equipped
20-key #6	CO 5	Equipped	Not equipped
20-key #5	CO 4	Equipped	Not equipped
20-key #4	CO 3	Equipped	Not equipped
20-key #3	CO 2	Equipped	Not equipped
20-key #2	CO 1	Equipped	Not equipped
20-key #1	INT	Equipped	Not equipped

5. Operate the [HOLD] key to place new data in memory.	All Station 17 LEDs (except MW/FL) go off
6A. Return to Step 2 in order to continue with this program . . . or . . . 6B. Go to Step 2 in another program table . . . or . . . 6C. Transfer data into working memory per Paragraph **02.06**	LED on MCAU goes off Station 17 MW/FL LED goes off New data is stored, previous data is erased

TABLE 21

PROGRAM 5XX—STATION CLASS OF SERVICE

1. Operate the SET switch on the MCAU	LED on MCAU on Station 17 MW/FL LED on System is in program mode Normal functions halt on Station 17
2. Operate the [SPKR] key on Station 17	SPKR LED steady on
3. Dial [5] [X] [X] on the dial pad XX = the station number of the station to be programmed *NOTE:* *For multiple station programming, refer to Paragraph 02.22.*	SPKR LED flashes continuously INT & CO LEDs will be on according to present data
4. Refer to the System Record Sheet. Using the [INT] and [CO] keys, turn the associated LEDs on or off, as required. The detailed meaning of each key is shown below.	An X on the record sheet means the LED should be on If the LED is already on, pushing the associated key will turn it off and vice-versa LEDs may be turned off and on until the desired pattern is set

NOTE:
If any key/LED is not shown, it is not used.

Feature	KEY	LED ON	LED OFF
Privacy Override Allowed	CO 17	Yes	No
DND Override Allowed	CO 16	Yes	No
Group Page D	CO 7	Included	Excluded
Group Page C	CO 6	Included	Excluded
Group Page B	CO 5	Included	Excluded
Group Page A	CO 4	Included	Excluded
Speakerphone	CO 3	Allowed	Not Allowed
Automatic Dialing	CO 2	Allowed	Not Allowed
Auto Line Preference	CO 1	Allowed	Not Allowed
Include in All Call	INT	Included	Excluded

5. Operate the [HOLD] key to place new data in memory.	All station 17 LEDs (except MW/FL) go off
6A. Return to Step 2 in order to continue with this program . . . or . . . 6B. Go to Step 2 in another program table . . . or . . . 6C. Transfer data into working memory per Paragraph 02.06	LED on MCAU goes off Station 17 MW/FL LED goes off New data is stored, previous data is erased

TABLE 22

PROGRAM 6XX—TOLL RESTRICTION CLASSIFICATION

1. Operate the SET switch on the MCAU	LED on MCAU on Station 17 MW/FL LED on System is in program mode Normal functions halt on Station 17
2. Operate the [SPKR] key on Station 17	SPKR LED steady on
3. Dial [6] [X] [X] on the dial pad XX = the station number of the station to be programmed. *NOTE:* *For multiple station programming, refer to Paragraph 02.22.*	SPKR LED flashes continuously INT & CO LEDs will be on according to present data
4. Refer to the System Record Sheet. Using the [INT] & [CO] keys, turn the associated LEDs on or off, as required. The detailed meaning of each key is shown below.	An X on the record sheet means the LED should be on If the LED is already on, pushing the associated key will turn it off and vice-versa LEDs may be turned off and on until the desired pattern is set

KEY	Data Meaning (LED on)
CO 13	Allow Exception Code #5*
CO 12	Allow Exception Code #4*
CO 11	Allow Exception Code #3**
CO 10	Allow Exception Code #2**
CO 9	Allow Exception Code #1**
CO 8	Allow 411**
CO 7	Allow 911**
CO 6	Allow 800**
CO 5	Restrict 0 as first digit
CO 4	Restrict 0 as second digit
CO 3	Restrict 1 as first digit
CO 2	Restrict 1 as second digit
CO 1	Allow 1 + 7 digits
INT	Allow 7 digits only

5. Operate the [HOLD] key to place new data in memory.	All Station 17 LEDs (except MW/FL) go off
6A. Return to Step 2 in order to continue with this program . . . or . . . 6B. Go to Step 2 in another program table . . . or . . . 6C. Transfer data into working memory per Paragraph 02.06	LED on MCAU goes off Station 17 MW/FL LED goes off New data is stored, previous data is erased

**29 digits maximum allowed*

***11 digits maximum allowed*

TABLE 23
PROGRAM 7XX—STATION OUTGOING RESTRICTION

1. Operate the **SET** switch on the MCAU	LED on MCAU on Station 17 MW/FL LED on System is in program mode Normal functions halt on Station 17
2. Operate the [SPKR] key on Station 17	SPKR LED steady on
3. Dial [7] [X] [X] on the dial pad XX = the station number of the station to be programmed. *NOTE:* *For multiple station programming, refer to Paragraph 02.22.*	SPKR LED flashes continuously CO LEDs will be on according to present data
4. Refer to the System Record Sheet. Using [CO] keys, turn the associated LEDs on or off, as required. • LED on = Restricted outgoing calls • Each CO key/LED represents itself—that is, if CO 1 LED is on, the station being programmed ([X] [X]) is restricted from outgoing calls on CO 1.	An X on the record sheet means the LED should be on If the LED is already on, pushing the associated key will turn it off and vice-versa LEDs may be turned off and on until the desired pattern is set
5. Operate the [HOLD] key to place new data in memory.	All Station 17 LEDs (except MW/FL) will go off New data is stored, old data is erased
6A. Return to Step 2 in order to continue with this program . . . or . . . 6B. Go to Step 2 in another program table . . . or . . . 6C. Transfer data into working memory per Paragraph **02.06**	LED on MCAU goes off Station 17 MW/FL LED goes off

TABLE 24

PROGRAM 8XX—CO RINGING ASSIGNMENTS—DAY

1. Operate the **SET** switch on the MCAU	LED on MCAU on Station 17 MW/FL LED on System is in program mode Normal functions halt on Station 17
2. Operate the [SPKR] key on Station 17	SPKR LED steady on
3. Dial [8] [X] [X] on the dial pad XX = the station number of the station to be programmed. *NOTE:* *For multiple station programming, refer to Paragraph 02.22*	SPKR LED flashes continuously CO LEDs will be on according to present data
NOTE: *a) Station designated to ring must be allowed access by Program 3XX.* *b) A maximum of 8 stations may be assigned to ring for any given CO line. If more are assigned, the lowest 8 station numbers will ring—others will be ignored.*	
4. Refer to the System Record Sheet. Using [CO] keys, turn the associated LEDs on or off, as required. LED on = Ring in DAY mode Each CO key/LED represents itself—that is, if CO 1 LED is on, the station being programmed ([X] [X]) will ring when a call comes in on CO 1 in the DAY mode.	An X on the record sheet means the LED should be on If the LED is already on, pushing the associated key will turn it off and vice-versa LEDs may be turned off and on until the desired pattern is set
5. Operate the [HOLD] key to place new data in memory.	All Station 17 LEDs (except MW/FL) will go off New data is stored, old data is erased
6A. Return to Step 2 in order to continue with this program . . . or . . . 6B. Go to Step 2 in another program table . . . or . . . 6C. Transfer data into working memory per Paragraph **02.06**	 LED on MCAU goes off Station 17 MW/FL LED goes off

TABLE 25
PROGRAM 8#XX—CO RINGING ASSIGNMENTS—DAY 2

1. Operate the SET switch on the MCAU	LED on MCAU on Station 17 MW/FL LED on System is in program mode Normal functions halt on Station 17
2. Operate the [SPKR] key on Station 17	SPKR LED steady on
3. Dial [8] [#] [X] [X] on the dial pad XX = the station number of the station to be programmed. *NOTE:* *For multiple station programming, refer to Paragraph 02.22*	SPKR LED flashes continuously CO LEDs will be on according to present data
NOTE: *a) Station designated to ring must be allowed access by Program 3XX.* *b) A maximum of 8 stations may be assigned to ring for any given CO line. If more are assigned, the lowest 8 station numbers will ring—others will be ignored.*	
4. Refer to the System Record Sheet. Using [CO] keys, turn the associated LEDs on or off, as required. LED on = Ring in DAY 2 mode Each CO key/LED represents itself—that is, if CO 1 LED is on, the station being programmed ([X] [X]) will ring when a call comes in on CO 1 in the DAY 2 mode.	An X on the record sheet means the LED should be on If the LED is already on, pushing the associated key will turn it off and vice-versa LEDs may be turned off and on until the desired pattern is set
5. Operate the [HOLD] key to place new data in memory.	All Station 17 LEDs (except MW/FL) will go off New data is stored, old data is erased
6A. Return to Step 2 in order to continue with this program . . . or . . . 6B. Go to Step 2 in another program table . . . or . . . 6C. Transfer data into working memory per Paragraph 02.06	LED on MCAU goes off Station 17 MW/FL LED goes off

TABLE 26

PROGRAM 9XX—CO RINGING ASSIGNMENTS—NITE

1. Operate the SET switch on the MCAU	LED on MCAU on Station 17 MW/FL LED on System is in program mode Normal functions halt on Station 17
2. Operate the [SPKR] key on Station 17	SPKR LED steady on
3. Dial [9] [X] [X] on the dial pad XX = the station number of the station to be programmed. *NOTE:* *For multiple station programming, refer to Paragraph 02.22*	SPKR LED flashes continuously CO LEDs will be on according to present data
NOTE: *a) Station designated to ring must be allowed access by Program 3XX.* *b) A maximum of 8 stations may be assigned to ring for any given CO line. If more are assigned, the lowest 8 station numbers will ring—others will be ignored.*	
4. Refer to the System Record Sheet. Using [CO] keys, turn the associated LEDs on or off, as required. LED on = Ring in NITE mode Each CO key/LED represents itself—that is, if CO 1 LED is on, the station being programmed ([X] [X]) will ring when a call comes in on CO 1 in the NITE mode.	An X on the record sheet means the LED should be on If the LED is already on, pushing the associated key will turn it off and vice-versa LEDs may be turned off and on until the desired pattern is set
5. Operate the [HOLD] key to place new data in memory.	All Station 17 LEDs (except MW/FL) will go off New data is stored, old data is erased
6A. Return to Step 2 in order to continue with this program . . . or . . . 6B. Go to Step 2 in another program table . . . or . . . 6C. Transfer data into working memory per Paragraph 02.06	LED on MCAU goes off Station 17 MW/FL LED goes off

OPERATING PROCEDURES
SECTION 100-020-400
JANUARY 1984

Strata XII & XX

OPERATING PROCEDURES

Strata XII & XX

OPERATING PROCEDURES

TABLE OF CONTENTS

PARAGRAPH	SUBJECT	PAGE
	TABLE of CONTENTS	i
01	INTRODUCTION	1
02	EKT INFORMATION	1
02.00.0	Standard Key Functions	1
02.01.0	Optional Key Functions	1
02.02.0	Volume Controls	1
02.03.0	LED Illuminating Indications	1
	TABLE A—TELEPHONE TONES	2
02.04.0	Busy Lamp Field	2
02.10.0	EKT Operating Procedures	2
02.11.0	Message Waiting	2
02.12.0	Making Calls	2
02.13.0	Tone Singalling	3
02.14.0	Call Pick-up	3
02.15.0	Automatic Callback	3
02.16.0	Call Holding	4
02.17.0	Call Transfer	4
02.18.0	Speakerphone	5
02.19.0	Conferencing	6
02.20.0	Automatic Dialing	7
02.21.0	Paging	9
02.22.0	Do Not Disturb	9
02.23.0	Override	9
02.24.0	Account Number Recording	10
03	DIRECT STATION SELECTION (DSS) CONSOLE	10
03.00.0	General	10
03.01.0	DSS Key Functions	10
03.10.0	DSS Operations	10
03.11.0	Call Answering CO/INT	10
03.12.0	Call Transfer	10
03.13.0	Message Waiting	11
03.14.0	All Call Page	11
04	STANDARD TELEPHONE (OPX) INFORMATION	11
04.00.0	General	11
04.10.0	Making Calls	11
04.11.0	Intercom Calls	11
04.12.0	Outside Calls	12
04.13.0	Call Transfer	12
04.14.0	Conference Calls	12
04.15.0	Paging	13
04.16.0	Override	13
04.17.0	Tone Signalling	13
04.18.0	Station Message Detail Recording	13
05	NIGHT TRANSFER	13

01 INTRODUCTION

01.00.1 The operation of the various pieces of equipment for the STRATA XII & XX electronic key telephone systems will be described in this section. The DSS and EKTs are specially designed units incorporating, as standard features, handsfree answering and full speakerphone capabilities. Each DSS and EKT is connected to the system using industry standard 2-pair wiring.

02 EKT INFORMATION

02.00.0 Standard Key Functions

02.00.1 The STRATA EKT has either 14 or 24 line and feature keys, depending upon model used, and a push-button dial pad. The following is a general description of each key.

CENTRAL OFFICE LINE KEY [CO]
- Accesses an outside line.

INTERCOM KEY [INT]
- Accesses an intercom line.

DO NOT DISTURB KEY [DND]
- Places the individual EKT in the Do Not Disturb mode.

MESSAGE WAITING & FLASH KEY [MW/FL]
- Used by the station designated as the Message Center to indicate when a message is waiting for any other station. On a station the MW LED is used to indicate a message is waiting at the message center. When used as a Flash Key, it disconnects and recalls dial tone on a CO line, or is used to access PBX features.

SPEAKER KEY [SPKR]
- Turns the speaker and Background Music (BGM) ON/OFF.

MUTE KEY [MUTE]
- Cuts off the Speakerphone's microphone for private conversation.

CONFERENCE KEY [CONF]
- Sets up conference calls.

HOLD KEY [HOLD]
- Places an outside call on hold.

02.01.0 Optional Key Functions

02.01.1 If your EKT is required to pick up 12 or fewer CO lines, and your station is equipped with the Automatic Dialing-Station feature, some of the unused keys may be utilized as one-touch automatic dialing [AD] keys. In addition, two keys may also be designated as [REP] and [RDL]. The following applies only if your EKT is so equipped.

AUTOMATIC DIALING KEYS [AD 1~7]
- One-key automatic-dialing for up to 5 or 7 different telephone numbers (depending upon EKT key configuration) after accessing a CO line.

REDIAL KEY [RDL]
- Will automatically redial the last telephone number dialed after accessing a CO line. (Used in place of the standard EKT's [#] key.)

REPERTORY KEY [REP]
- Provides access to automatic-dialing address codes. (Used in place of the standard EKT's [*] key.)

NOTE:
The remaining function keys retain the same functions as their counterparts on the standard EKT.

02.02.0 Volume Controls

02.02.1 Voice and ring tone volume levels on the STRATA EKT are controlled by separate volume controls located on the rear of the telephone. The control on the right-hand side adjusts speaker volume for dial tone, voice and BGM level, the left-hand side control adjusts ring tone and intercom voice-announcement volume.

02.03.0 LED Illuminating Indications

I-Use:
- A steady-double flash rate (2.0 seconds on—1/8 second off—1/8 second on—1/8 second off) indicates the CO line presently in use at the EKT that originated the call. Other stations' LEDs will be steady-on for that line.

I-Called:
- A pulsating on/off flash rate (10 impulses per second (IPS) for 1 second on and 1 second off) will appear on the EKT intercom LED that is being called.

I-Hold:
- A fast (4 IPS) flash rate (1/8 second on—1/8

TABLE A
TELEPHONE TONES

Type of Tones		Signal
CO Line Ringing	(Idle Station)	600 Hz/800 Hz, modulated by 16 Hz, 1 second on, 3 seconds off.
	(Busy Station)	2400 Hz, modulated by 10 Hz, 1 second on, 3 seconds off.
Intercom Line Ringing		600 Hz, 1 second on, 3 seconds off.
Ring-back		600 Hz, 1 second on, 3 seconds off.
Intercom Dial Tone		600 Hz, continuous
Busy Tone		600 Hz, 0.25 second on, 0.25 second off.
Do Not Disturb Tone		600 Hz, 0.12 second on, 0.12 second off.
Busy & DND Override Tone		2400 Hz, 1 second on, 3 seconds off.
Voice Page Warning Tone		600 Hz, 1 second on only (via EKT speaker).
Executive Override Warning Tone		600 Hz, 0.5 second on only (via handset).
Hold Recall		2400 Hz, modulated by 10 Hz, 1 second on, 1 second off.

second off) indicates the CO line placed on hold at that EKT. The LEDs of the CO line on hold will flash at a medium rate (3/4 second on—1/4 second off) at the other stations.

Hold Recall:
- A quick flash rate matching the tones (2 IPS for 1 second—10 IPS for 1 second) will remind a station which line has been on hold for the programmed period of time.

Conference:
- A very fast flash rate (10 IPS) indicates the CO line presently in the Conference mode. Other stations' LEDs will show the same indication for that line.

CO Incoming Call:
- A slow flash rate (1/2 second on—1/2 second off) indicates which CO line has an incoming call.

02.04.0 Busy Lamp Field (BLF) EKT

02.04.1 The optional 10-key BLF EKT has an LED panel showing the busy/idle status of each station for up to 16 positions (stations 10~25). A station in the DND mode will show as busy. For proper operation, the BLF EKT must be installed at stations 10~25.

02.10.0 EKT Operating Procedures

02.11.0 Message Waiting

02.11.1 To use Message Waiting:

1) The Message Waiting Center calls a station on the intercom. If no answer, depress the [MW/FL] key on the Message Waiting Center EKT. This causes the MW/FL LED on the called station to illuminate.

2) The called station user lifts handset and calls the Message Waiting Center on the intercom. After receiving the message(s), hang up.

02.11.2 To clear Message Waiting LED:

1) At the **called** station, lift the handset (do not depress an [INT] or [CO] line key), and depress the [MW/FL] key. Hang up.

2) At the Message Waiting Center, call the station and depress the [MW/FL] key **twice.**

02.12.0 Making Calls

02.12.1 To make an outside call (off-hook dialing):

1) Lift the handset.

2) Depress an available [CO] line key.

3) Listen for dial tone.
   - CO line LED will flash at the I-use rate.

4) Dial the desired telephone number.

5) Hang up when the call is completed.

02.12.2 To receive an incoming call:

1) You will hear a ringing tone.
   - The CO line LED will flash at the CO incoming call rate.

2) Lift the handset.
   - CO line LED will flash at the I-use rate.

3) Hang up when the call is completed.

02.12.3 To make an intercom call:

1) Lift the handset.

2) Depress the [INT] key.
   - You will hear intercom dial tone.
   - INT LED will flash at the I-use rate.

3) Dial the desired station number.
   - You will hear a single ring tone.*

4) Speak when the ring tone ends.

5) Hang up when the call is completed.

**Tone signalling is accomplished by dialing [1] after the station number. (See Tone Signalling.)*

02.12.4 To receive an intercom call:

1) You will hear a single long tone, followed by the caller's voice.
   - The INT LED will flash at the I-called rate.

2) Lift the handset.
   - The INT LED will flash at the I-use rate.

3) Hang up when the call is completed.

02.13.0 Tone Signalling

Programmable option.

1) Call another station via the intercom.
   - You will hear a ringing tone as the primary method of intercom call signalling (voice announcing is inoperative).

2) Speak to the called party when the call is answered.

3) A voice call can be accomplished by dialing [1].

02.14.0 Call Pick-up

02.14.1 To use Call Pick-up:

1) Lift the handset—**do not** depress a key.

2) Dial the station number of the telephone that is being called.
   - The call will be transferred to your telephone.
   - The INT LED will flash at the I-use rate.

3) Converse with the calling party as in a usual call.

4) Hang up when the call is completed.

NOTE:
An external page only may be picked up by substituting the page access code for the station number in the above steps.

02.15.0 Automatic Callback

02.15.1 To use Automatic Callback:

1) After reaching a busy or DND station, on an intercom call, you may:
   a) Dial a [2] for busy override (see OVERRIDE) . . .
   . . . or . . .
   b) Dial a [4] to set Automatic Callback—busy tone will stop, and you will hear dial tone for two seconds and then busy tone again.
   c) You may go on-hook or make other calls while waiting for the called station to become available.

2) When the called station becomes idle:
   a) Your telephone will ring at a fast rate.
   b) Answer the call within six seconds to prevent the callback from being cancelled.
   c) You will hear a single tone.
   d) Proceed to voice-announce.
   e) Proceed with the conversation.

NOTES:
1. *You may cancel the requests anytime prior to the actual callback by depressing the [INT] key and dialing [7] [7].*
2. *If, after answering a callback, you hear a busy tone, it means the called party*

has already received or originated another call. Your request is ***not*** *cancelled. You will be called again the next time the station becomes idle.*

02.16.0 Call Holding

02.16.1 To hold a call:

1) While connected to an outside call, depress the [HOLD] key.
   - The CO line LED will flash at the I-hold rate.

02.16.2 To release a held call:

1) Depress the appropriate [CO] key.

NOTES:
1. *When a CO line is placed on hold it may be picked up at any station.*
2. *An on-hold reminder tone is generated within a pre-determined time at the station that placed the line on hold. The LED flash rate of the recalling line will synchronize with the tone.*
3. *Hold is automatically released if the other party hangs up.*

02.17.0 Call Transfer

02.17.1 To transfer a call (with appearing CO line):

1) While connected to an outside call, depress the [HOLD] key.
   - The CO line LED will flash at the I-hold rate.

2) Depress the [INT] key; you will hear intercom dial tone.
   - The INT LED will flash at the I-use rate.

3) Dial the desired station number.

4A) If you hear a single ring tone, announce the call (noting the correct CO line), and hang up.
   - The CO line LED will flash at the I-hold rate until the other station connects with the call.

4B) If the station is busy, you have several choices:
   a) If you are the Message Waiting Center, depress the [MW/FL] key.
   b) Depress the appropriate [CO] key and inform the caller of the situation.
   c) Dial [4] for automatic callback.
   d) Dial [2] for busy override (see Override).

02.17.2 To transfer a call (with non-appearing CO line):

Line does not appear at the desired station.

1) While connected to the outside line, depress the [CONF] key.
   - The CO line LED will flash at the conference rate.
   - You will hear intercom dial tone.
   - The INT LED will flash at the I-use rate.

2) Dial the desired station number.

3A) If you hear a single ring tone:
   a) Announce the call (noting the correct CO line).
   b) Wait for the station user to go off-hook*.
   c) Hang up.

3B) If the station is busy, you have several choices:
   a) Dial [2] for busy override (see Override).
   b) Depress the appropriate CO key and inform the caller of the situation.
   c) Dial [4] for automatic callback.
   d) If you are the Message Waiting Center, depress the [MW/FL] key.

**When transferring to a station that does not have a key assigned to that line, instruct the called party to lift the handset. Transfer is impossible unless the called station is off-hook!*

02.17.3 To receive a transferred call (with appearing CO line):

Call may be transferred from either the attendant or another station.

1) You will hear a single long tone, followed by an announcement.
   - The INT LED will flash at the I-called rate.

2) Acknowledge the announcement.

3) Depress the announced [CO] key.
   - You are now connected with the outside call.

02.17.4 To receive a transferred call (with non-appearing CO line):

Line does not appear on your EKT.

1) You will hear a single long tone, followed by an announcement.
   - The INT LED will flash at the I-called rate.

2) Lift the handset to acknowledge the announcement (you **cannot** receive a call on a non-appearing line unless you are off-hook).
   - Call will be transferred when the announcer goes on-hook.
   - The INT LED will flash at the I-use rate.

3) You are now connected with the outside call.

02.17.5 To transfer a call on a non-appearing CO line:

Line does not appear on your EKT.

1) While connected to the outside line, depress the [CONF] key.
   - The INT LED will flash at the conference rate.

2) You will hear intercom dial tone.

3) Dial the desired station number.

4A) If you hear a single ring tone:
   a) Announce the call.
   b) Wait for the station to come off-hook*.
   c) Hang up.

4B) If the station is busy:
   a) Depress the [CONF] key and inform the caller of the situation. (It is not possible to put a non-appearing line on hold.)

The station must come off-hook even if it **has the CO line appearance. If you hang up before the called station is off-hook, the CO line will be disconnected.*

02.18.0 Speakerphone

02.18.1 To make an outside call with Speakerphone (on-hook dialing):

1) Leave the handset on-hook.

2) Depress any available [CO] line key and listen for dial tone.
   - The CO LED will flash at the I-use rate.

3) Dial the desired telephone number.

4) Speak at a normal voice level in the direction of telephone.

5) Depress the [SPKR] key when the call is completed.

02.18.2 To receive an incoming call (handsfree):

1) You will hear a ringing tone.

2) Leave the handset on-hook.

3) Depress the key of the CO line that is flashing at the CO incoming call rate.
   - The CO LED will flash at the I-use rate.

4) Speak at a normal voice level in the direction of telephone.

5) Depress the [SPKR] key when the call is completed.

02.18.3 To call on intercom with Speakerphone (on-hook dialing):

1) Leave the handset on-hook.

2) Depress the [INT] key and listen for intercom dial tone.
   - The INT LED will flash at the I-use rate.

3) Dial the desired station number and you will hear a single ring tone.

4) Speak at a normal voice level in the direction of telephone.

5) Depress the [SPKR] key when the call is completed.

02.18.4 To receive an intercom call (handsfree):

1) You will hear a single long tone, followed by the caller's voice.
   - The INT LED will flash at the I-called rate.

2) Leave the handset on-hook.

3) To assure a private conversation, depress the [INT] key.
   - The INT LED will flash at the I-use rate.

NOTE:
If privacy is not required, it is not necessary to depress the [INT] key. However, any other

station can access the connection (thereby disconnecting you) by using the Call Pick-up feature.

4) Speak at a normal voice level in the direction of telephone.

5) Depress the [SPKR] key when the call is completed (if you depressed the [INT] key earlier).

NOTE:
To change from Speakerphone to handset: Lift the handset.
To change from handset to Speakerphone: Depress and hold down the [SPKR] key. Return the handset to on-hook. Release the [SPKR] key.

02.18.5 Background Music.

Listening to music via the EKT speaker. Must have a music source connected to the system.

1) To listen to background music via the EKT speaker, depress the [SPKR] key.

2) Adjust the volume level with the control on the right side of your EKT.

3) Depress the [SPKR] key again to cancel music.

NOTE:
When in BGM mode the station is still a fully functional telephone. Incoming and outgoing calls will temporarily mute the BGM during the time the station is in use.

02.19.0 Conferencing

02.19.1 To Conference 3 Stations & 2 CO Lines, or 4 Stations & 1 CO Line:

1) Establish a usual 1-CO line call.

2) To add a second CO line:

a) Depress the [CONF] key—you will hear intercom dial tone.
- The CO LED will flash at the conference rate and the INT LED will flash at the I-use rate.

b) Select a second CO line and dial the next telephone number.

c) Depress the [CONF] key after the party answers.*
- CO LEDs will flash at the I-use rate and all parties will be conferenced.

**If you receive a busy tone or no answer, return to the original connection by depressing the original [CO] line key.*

3) To add another station:

a) Depress the [CONF] key—you will hear intercom dial tone.
- The CO LED(s) will flash at the conference rate and the INT LED will flash at the I-use rate.

b) Dial the number of the other station.

c) Depress the [CONF] key after the party answers.*
- CO LED(s) will flash at the I-use rate and all parties will be conferenced.

d) Repeat to add another party (maximum: three stations/two CO lines or four stations/one CO line).

e) Hang up when conference call is completed.

**NOTES:*
1. *The new station will not be conferenced unless the user lifts the handset or depresses the [INT] key.*
2. *If you receive a busy tone or no answer, return to the original connection by depressing the [CONF] key.*

02.19.2 To conference up to 4 stations and 1 intercom line:

1) Establish a usual 2-station intercom call.

2) Depress the [CONF] key.
- You will hear intercom dial tone.
- The INT LED will flash at the conference rate.

3) Dial the third station's number.

4) Depress the [CONF] key after the party answers.*
- INT LED will flash at the I-use rate and all parties will be conferenced.

5) Repeat to add a fourth station to the conference call.

NOTES:
1. *If you receive a busy tone or no answer, return to the original connection by depressing the [CONF] key.*
2. *The new station will not be conferenced unless the user lifts the handset or depresses the [INT] key.*

02.20.0 Automatic Dialing

02.20.1 To dial a frequently called number automatically:

NOTE:
*See Paragraphs **02.20.7~02.20.9** if your EKT is equipped with [AD] keys.*

1) Lift the handset.
2) Depress an available [CO] line key.
3) Listen for dial tone.
4) Depress the [*] key.
5) Dial the 2-digit address code that corresponds to the desired telephone number.
   - The STRATA system will automatically dial the number for you.
6) Hang up when the call is completed.

02.20.2 To redial the last number called automatically:

1) Depress an available [CO] line key.
2) Listen for dial tone.
3) Depress the [#] key.
   - The STRATA system will automatically dial the last telephone number that was dialed at that station.
4) Hang up when the call is completed.

02.20.3 To chain dial automatically:

Automatically dials two or more sets of numbers during one call. For use with long distance routing.

1) Lift the handset.
2) Depress an available [CO] line key.
3) Listen for dial tone.
4) Depress the [*] key.
5) Dial the 2-digit address code that corresponds to the first telephone number to be dialed.
6) Depress the [*] key.
7) Dial the 2-digit address code that corresponds to the second telephone number to be dialed.

NOTE:
It is not necessary to wait until the system has finished dialing to proceed to this step.

8) Repeat the above steps for each subsequent number to be dialed.
   - The STRATA system will automatically dial the numbers for you.
9) Hang up when the call is completed.

NOTE:
Only the first number dialed during the chain dial will be repeated by the automatic redial.

02.20.4 To output [*] & [#] tones:

When the special [*] or [#] tones must be output (for computer input service or other use), the Automatic Dialing feature must be disabled to permit manual dialing of the [*] and [#] tones.

1) Depress any available [CO] line key.
2) Dial any desired numbers utilizing the Automatic Dialing feature in the usual manner.
3) To disable the Automatic Dialing feature, thereby permitting the [#] and [*] tones to be output manually, first press the [*] key and then the [#] key.

NOTE:
Only manual dialing will be possible and the special [#] and [*] tones, as well as digits [0~9], will be output as dialed. The Automatic Dialing feature will be restored when the EKT is hung up, or the CO line is placed on hold.

02.20.5 Telephone Number Storage*

Telephone numbers can be stored in the system memory by station 10 only.

1) Remove the handset from its hook (do not activate a CO or an intercom line).

2) Depress the [#] and [*] keys, respectively.

3) Dial a 2-digit address code (codes run consecutively from 60 through 83, and 60~99 if the system is equipped with the optional expanded memory).

4) Dial the telephone number (up to 16 digits) to be stored.**

5) Depress the [#] key to record the number in memory.

6) Repeat the above steps with every number, up to the standard 24 (or optional 40), to be stored.

7) Return the handset to on-hook.

8) Write down the address codes and numbers for future reference.

**Repeat this procedure to replace the stored telephone numbers with new numbers.*
***It may be necessary to insert a pause after the trunk access code to allow for dial tone delay. If so, after entering the PBX access code, depress the [MW/FL] key to insert a 3-second pause.*

02.20.6 To store a telephone number in station memory (optional feature):*

Telephone numbers can be stored by each station.

1) Remove the handset from its hook (do not activate a CO or an intercom line).

2) Depress the [#] and [*] keys, respectively.

3) Dial a 2-digit address code (codes run consecutively from 10 through 29 or 49, depending upon the type and amount of optional memory provided).

4) Dial the telephone number (up to 16 digits) to be stored.**

5) Depress the [#] key to record the number in memory.

6) Repeat the above steps with every number to be stored (up to the maximum for your system).

7) Return the handset to on-hook.

8) Write down the address codes and numbers for future reference.

**Repeat this procedure to replace the stored telephone numbers with new numbers.*
***It may be necessary to insert a pause after the trunk access code to allow for dial tone delay. If so, after entering the PBX access code, depress the [MW/FL] key to insert a 3-second pause.*

02.20.7 Dialing a number automatically with automatic dialing keys:

Telephone numbers can be accessed by each of the AD 1~5 or 7 keys or one of the 2-digit access codes in the usual STRATA manner.

1) Lift the handset.

2) Depress an available [CO] line key.

3) Listen for dial tone.

4) Depress the [AD] key (or depress the [REP] key and dial the 2-digit number) that corresponds to the desired telephone number.
   - STRATA will automatically dial the number for you.

02.20.8 To redial the last number called automatically with [RDL] key:

1) Depress an available [CO] line key.

2) Listen for dial tone.

3) Depress the [RDL] key.
   - STRATA will automatically dial the last telephone number that was dialed from that station.

4) Hang up when the call is completed.

02.20.9 To store telephone numbers:*

1) Lift the handset (do not activate a CO or an intercom line).

2) Depress the [RDL] and [REP] keys (or, if these

keys do not appear on your EKT, the [#] and [*] **), respectively.

3) Depress one of the [AD] keys or dial a 2-digit address code (codes run consecutively from 10 through 29 or 49, depending upon the type and amount of optional memory provided; AD numbers reside at 10 ~ 16).

4) Dial the telephone number to be stored (16 digits maximum).***

5) Depress the [RDL] key to record number in memory.

6) Repeat the above steps with every number to be stored (up to 40).

7) Return the handset to on-hook.

8) Write down the address codes and telephone numbers for future reference.

Repeat this procedure to replace the stored telephone numbers with new numbers.

On some EKTs the [RDL] and [REP] keys may not appear. If not, use the [#] and [*] keys for Automatic Dialing access. If the [RDL] and [REP] keys **do appear, the [#] and [*] keys will not function for Automatic Dialing access at that station.*

***It may be necessary to insert a pause after the trunk access code to allow for dial tone delay. If so, after entering the PBX access code depress the [MW/FL] key to insert a 3-second pause.*

02.21.0 Paging

02.21.1 To Page:

1) Lift the handset.

2) Depress the [INT] key and dial one of the following:

[8][0] = All Call
[8][1] = Group #1
[8][2] = Group #2
[8][3] = Group #3
[8][4] = Group #4
[8][8] = All Call (with External Page)*
[8][9] = External Page

3) Make your announcement twice in a normal voice level.

4) Hang up when you have completed your announcement.

**Programmable option—also see Call Pick-up.*

02.22.0 Do Not Disturb

02.22.1 To engage the Do Not Disturb mode:

1) Depress the [DND] key.
   - DND LED will light steady.

02.22.2 To release the Do Not Disturb mode:

1) Depress the [DND] key.
   - DND LED will go off.

02.23.0 Override

02.23.1 To initiate a busy override signal:

1) After reaching a busy station, you may signal that station that a call is waiting by dialing [2].
   - A tone signal will be heard at the busy station every 5 seconds.

2) After overriding the busy station, remain on the intercom to allow the busy station to respond.

02.23.2 To respond to a busy override signal:

1) If on intercom:
   a) Terminate the existing intercom call.
   b) Depress the [INT] key.
   c) Speak to the overriding station.

2) If on a CO line:
   a) Place the CO line on hold.
   b) Depress the [INT] key.
   c) Speak to the overriding station.

02.23.3 To override DND (programmable option):

1) After reaching a DND station (fast busy tone), you may signal that station that a call is waiting by dialing [2].
   - A tone signal will be heard at the DND station every 5 seconds.

2) After overriding the DND station, remain on the intercom to allow the DND station to respond.

02.23.4 To respond to a DND override signal:

1) Depress the [INT] key.

2) Speak to the override station.

02.23.5 To use executive override (programmable option):

Overrides the CO line privacy feature, and is able to enter any existing conversation within the system. Only two stations can be programmed for this feature.

1) You may enter any conversation on any CO/PBX line by simply depressing the appropriate key.
   - A warning tone, however, is sounded before the overriding station is actually connected.

02.24.0 Account Number Recording

02.24.1 Station Message Detail Recording (if your system is equipped) allows data to be collected for each outgoing and (optionally) incoming CO line call. This data may then be output to either a printer or recording device. Each call may also be given an account number for filing purposes. The account number can be entered anytime after dialing the outside number on an outgoing call and anytime during the conversation on an incoming call.

02.24.2 To record an account number:

1) Dial [*][5][0] and the account number (6 digits).

   For example: [*][5][0][1][2][3][4][5][6]

2) Hang up when the call is completed.

NOTE:
The conversation is not interrupted while recording an account number, but the outside party will not hear any tones unless more than 6 digits are dialed.

03
DIRECT STATION SELECTION (DSS) CONSOLE

03.00.0 General

03.00.1 The Direct Station Selection (DSS) console has been designed for use where the volume of incoming calls warrants a dedicated call forwarding location.

03.00.2 Similar in shape and size to the STRATA EKT, the DSS makes an attractive and easy-to-use companion for the busy attendant. It features a key and lamp (LED) for each telephone in the system, as well as a dedicated intercom circuit reserved specifically for the operator's use.

03.01.0 DSS Key Functions

STATION KEY/LED [10~65]
- Used as a one-step operation to call another telephone. A dedicated key is provided for each station; its accompanying LED displays the busy/idle status of the station.

INTERCOM KEY [INT]
- Serves the same function as the [INT] key on an EKT by accessing an intercom line. Since the EKT used with the DSS has all line keys assigned as CO lines, the attendant's intercom and special function keys are located on the DSS console.

ALL CALL KEY [AC]
- Provides direct access to all EKT speakers for paging.

MESSAGE WAITING/FLASH KEY [MW/FL]
- Used by the station designated as the Message Center to indicate when a message is waiting for any other station. On a station the MW LED is used to indicate a message is waiting at the message center. When used as a Flash Key, it disconnects and recalls dial tone on a CO line, or is used to access PBX features.

NIGHT TRANSFER [NT]
- Used by the attendant to control the system's CO/PBX line ringing patterns. Different ringing patterns are chosen by sequential depressions of the [NT] key.

03.10.0 DSS Operations

03.11.0 Call Answering CO/INT

03.11.1 Answer using the same procedures as with a normal EKT. Note that the [INT] key for the DSS EKT is located on the DSS console.

03.12.0 Call Transfer

03.12.1 To transfer a CO line call (line appears on called station):

1) Depress the number key corresponding to the station to be called.
   - The CO line will be placed on hold automatically and the CO LED will flash at the I-hold rate.

2) You will hear a single ring tone.*

3) Announce the call when the ring tone ends.

4) Hang up when the announcement is completed.
   - You will be recalled after a specified period of time if the call is not picked-up.

NOTES:
1. *If you receive a busy or no answer, return to the call by depressing the CO line key.*
2. *A call to a busy station by the DSS automatically causes the Busy Override tone to be sounded at the called station.*
3. *If the EKT to which the call is to be transferred does not have that CO line assigned to a key, see Non-Appearing Line Transfer.*

03.12.2 To transfer a CO line call (line **does not** appear on called station):

1) Depress the [CONF] key.
   - The CO LED will flash at the conference rate.

2) You will hear intercom dial tone.

3) Depress the desired station key on the DSS console.
   - The station LED will flash continuously and you will hear a single ring tone.

4) Voice-announce the call. Instruct the called station to pick up the handset.*

5) The station LED will light steadily when the station goes off-hook.

6) Hang up.
   - The call will be transferred to the station's intercom line and your CO line LED will light steadily.

**Call transfer is impossible unless the called party is off-hook!*

03.13.0 **Message Waiting**

03.13.1 To use Message Waiting.

1) Use the DSS [MW/FL] key in the same manner as the standard EKT.

03.14.0 **All Call Page**

03.14.1 To page all stations:

1) Lift the handset.

2) Depress the [AC] key.
   - AC LED will light steadily.

3) Make your announcement twice in a normal voice level.

4) Hang up when you have completed your announcement.

04 STANDARD TELEPHONE (OPX) INFORMATION

04.00.0 **General**

04.00.1 Intercom (INT) dial tone must be heard before dialing; if you have just lifted the handset, you will hear intercom dial tone. During a conversation, intercom dial tone is obtained by "flashing" the hookswitch (plunger) located in the handset cradle. To flash, depress the hookswitch momentarily (for about a 1/2 second), and in response you will hear intercom dial tone.

04.10.0 **Making Calls**

04.11.0 **Intercom Calls**

04.11.1 To make an intercom call:

1) Lift the handset.

2) You will hear intercom dial tone.

3) Dial the desired station number and you will hear single ring tone.*

4) Speak when the ring tone ends.

5) Hang up when the call is complete.

**If you are calling another standard telephone, ring tones will continue. Wait for an answer.*

Tone signalling over an EKT can be accomplished by dialing [1] after the station number.

04.11.2 To receive an intercom call:

1) You will hear a ringing signal (1 second on—3 seconds off).
2) Lift the handset and speak to the caller.
3) Hang up when the call is completed.

04.12.0 Outside Calls

04.12.1 To make an outside call:

1) Lift the handset.
2) You will hear intercom dial tone.
3) Dial the CO line access code:
   - 9 = random access to an available local line.
   - 7XX = selective access to line number "XX".
4) Listen for CO dial tone.
5) Dial the desired telephone number.
6) Hang up when the call is completed.

04.12.2 To receive an incoming call (if the call is transferred from another station):

1) You will hear a ringing signal (1 second on—3 seconds off).
2) Lift the handset and speak to the station user.
3) You will be connected to the CO line when the transferring station goes on-hook.
4) Hang up when the call is completed.

04.12.3 To receive an incoming call (if the call is directly from the CO line):

The station must be programmed to ring on that line and be equipped with the ringing line preference feature.

1) You will hear a ringing signal (2 short rings, then 3 seconds off).
2) Lift the handset.
3) Speak to the outside caller.
4) Hang up when the call is completed.

04.13.0 Call Transfer

04.13.1 To transfer a call:

1) While connected to an outside line, flash the hookswitch.
2) You will hear intercom dial tone.
3) Dial the station number to which the call is to be transferred.
4) Announce the call and wait for the called station to come off-hook.*
5) Hang up.

**If you hang up before the called station is off-hook, the CO line will be disconnected. If you receive a busy tone or no answer, return to the original connection by flashing the hookswitch.*

04.14.0 Conference Calls

04.14.1 To conference 4 stations & 1 CO line:

1) Establish a standard 1-CO line call.
2) Flash the hookswitch.
   - You will hear intercom dial tone.
   - The existing call will be on-hold.
3) Dial the number of the desired station.
4) Flash the hookswitch after the party answers.*
   - All parties will be conferenced.
5) Repeat to add another station. (Four stations, including yours, and one CO line is maximum.)
6) Hang up when the call is complete.

**The called party must come off-hook or depress the [INT] key. If you receive a busy tone or no answer, return to the original connection by flashing the hookswitch.*

04.14.2 To conference up to 4 stations on intercom:

1) Establish a standard 2-station intercom call.

2) Flash the hookswitch.
   - You will hear intercom dial tone.
   - The existing call will be on-hold.

3) Dial the number of the desired station.

4) Flash the hookswitch after the party answers.*
   - All parties will be conferenced.

5) Repeat to add another station. (Four stations, including yours, is maximum.)

6) Hang up when the call is completed.

**The called party must come off-hook or depress the [INT] key. If you receive a busy tone or no answer, return to the original connection by flashing the hookswitch.*

04.15.0 Paging

04.15.1 To page:

1) Lift the handset.

2) Listen for intercom dial tone and dial the following:

   [8][0] = All Call
   [8][1] = Group #1
   [8][2] = Group #2
   [8][3] = Group #3
   [8][4] = Group #4
   [8][8] = All Call (with External Page)*
   [8][9] = External Page

3) Make your announcement twice in a normal voice level.

4) Hang up when you have completed your announcement.

**Programmable option.*

04.16.0 Override

04.16.1 To initiate a busy override signal:

1) After reaching a busy station, you may signal that station that a call is waiting by dialing [2].
   - A tone signal will be heard at the busy station.

04.16.2 To override DND:

Programmable option.

1) After reaching a DND station, you may signal that station that a call is waiting by dialing [2].
   - A tone signal will be heard at the DND station.

04.17.0 Tone Signalling

Programmable option.

04.17.1 To make a tone signal call:

1) Call another station via intercom.
   - You will hear a ringing tone as the primary method of intercom call signalling (voice announcing is inoperative).

2) Speak to the called party when the call is answered.

3) A voice call can be accomplished by dialing [1].

04.18.0 Station Message Detail Recording

04.18.1 Station Message Detail Recording (if your system is equipped) allows data to be collected for each outgoing and (optionally) incoming CO line call. This data may then be output to either a printer or recording device. However, DTMF OPX stations will not record account numbers or telephone numbers (rotary dial telephones will output telephone numbers but not account numbers). When the station user hangs up the station number, telephone number*, time of day and call duration will be output.

**Rotary dial only.*

05 NIGHT TRANSFER

05.00.0 Programmable option.

05.00.1 On an optional basis, your STRATA system can function with two or three ringing patterns. If three patterns are selected, they are designated **Day, Day 2,** and **Nite.** If only two patterns are selected, **Day** and **Nite** designations are used.

05.00.2 In both cases, different ringing patterns are chosen by sequential depressions of the [NT] key on either a DSS console or (if the system has no DSS console equipped) on station 10.

05.00.3 The active pattern is shown by the state of the NT LED as follows:

	Three-pattern	Two-pattern
DAY	OFF	OFF
DAY 2	FLASH	N/A
NITE	ON	ON

Strata XII & XX

FAULT FINDING PROCEDURES

Strata
XII & XX

FAULT FINDING PROCEDURES

TABLE OF CONTENTS

PARAGRAPH	SUBJECT	PAGE
	TABLE of CONTENTS	i
01	GENERAL	1
02	FAULT CLASSIFICATION	1
03	FAULT CLEARING PROCEDURES	1
04	DEFECTIVE APPARATUS RETURNS	1
05	FAULT IDENTIFICATION AND ELIMINATION PROCEDURES	2
	TABLE A–STATION CABLE CONTINUITY CHECK USING VOLTMETER	3
	TABLE B–STATION CABLE CONTINUITY CHECK USING OHMETER	3
	TABLE C–STRATA XII & XX POWER DISTRIBUTION	4
	TABLE D–STRATA XII & XX CROSSPOINT MATRIX LOCATION	6
	TABLE–CRDU POSITIONS	6
	FLOW CHARTS	
	CHART NO. 1–FAULT CLASSIFICATION	7
	CHART NO. 2–POWER FAULTS	9
	CHART NO. 3–STATION FAULTS	11
	CHART NO. 4–MKSU FAULTS	13
	CHART NO. 5–CO LINE FAULTS	14
	CHART NO. 6–INTERCOM FAULTS	17
	CHART NO. 7–DSS FAULTS	19
	CHART NO. 8–AUTOMATIC DIALING FAULTS	21
	CHART NO. 9–MOH, BGM, PAGE & RELAY SERVICE FAULTS	23
	CHART NO. 10–SMDR FAULTS	25
	CHART NO. 11–OPX FAULTS	26
	CHART NO. 12–OPL FAULTS	28

ILLUSTRATION LIST

FIGURE	TITLE	PAGE
1	FLOW CHART SYMBOLS	2
2	SIMPLIFIED MPRU SCHEMATIC	5

01 GENERAL

01.01 This section describes the maintenance procedures used for the diagnosis of faults in the STRATA XII & XX electronic key telephone systems. Faults are classified and then cleared by replacing apparatus and performing operational tests in the sequences prescribed by the fault clearing flow charts in Paragraph 05.

02 FAULT CLASSIFICATION

02.01 A fault classification flow chart is provided to ensure that fault clearing is pursued in a logical sequence (Chart No. 1).

02.02 In the flow charts an assumption is made that the fault was discovered and reported by a station user. All faults, therefore, are classified according to the way they would appear at the station.

02.03 Faults and associated flow charts are organized into the following categories:

Flow Chart	Title
1	Fault Classification
2	Power Faults
3	Station Faults
4	MKSU Faults
5	CO Line Faults
6	Intercom Faults
7	DSS Faults
8	Automatic Dialing Faults
9	MOH, BGM, Page, Relay Service Faults
10	SMDR Faults
11	OPX Faults
12	OPL Faults

03 FAULT CLEARING PROCEDURES

03.01 Before attempting to clear any fault, ensure that it is in the STRATA system and not caused by associated external equipment such as wiring, MOH source, etc.

IMPORTANT:
Many features of the STRATA XII & XX systems are assigned, enabled or disabled using software entries as described in Section 100-020-300, System Programming. Further, with the exception of Programs 5XX~9XX, programming changes are not effective until the new data has been shifted into working memory (see Paragraph 02.06 of Section 100-020-300, System Programming). It is important to verify that the system programming is correct and functional before trouble-shooting the hardware.

03.02 In new systems, or when the MCAU/AMMU or CRDU has been changed, the initialize procedure must be performed before testing. The system data stored on the original MCAU/AMMU or CRDU will be protected from loss by the battery on that PCB. Therefore, the initialize sequence *should not* be performed if the original PCB is reinstalled.

03.03 Faults in the STRATA systems are cleared by replacing PCBs, EKTs or the power supply, as instructed in the flow charts.

03.04 Five symbols are used in the flow charts. These symbols are identified in Figure 1.

03.05 The flow charts are sequentially arranged to permit rapid fault localization within the STRATA XII & XX systems. *All fault clearing must begin with the Fault Classification Flow Chart, which is arranged in the correct fault locating sequence.*

03.06 The following precautions must be observed when handling PCBs.

DO NOT:

- Drop a PCB
- Stack one PCB on top of another
- Handle a PCB without discharging any static electricity from your person by touching the grounded MKSU
- Touch PCB contacts with your fingers

IMPORTANT:
If the fault is not cleared by substituting a PCB, the original PCB must be installed in the MKSU BEFORE trying another PCB.

04 DEFECTIVE APPARATUS RETURNS

04.01 When defective STRATA apparatus is shipped for repair, the apparatus must be packed in a suitable container (an original type box is highly recommended).

START AND END OF
A FLOW CHART SEQUENCE

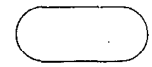

IMPORTANT NOTES
AFFECTING THE FAULT
CLEARING PROCEDURE

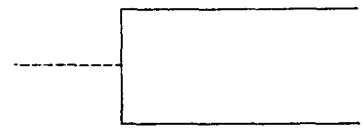

QUESTION TO BE ANSWERED
YES OR NO

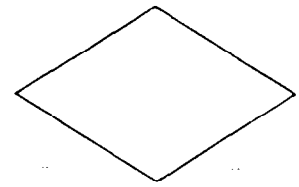

PROGRESSION TO OR FROM
ANOTHER FLOW CHART LOCATION.
LETTER WILL DENOTE EXACT ENTRANCE
OR EXIT POINT

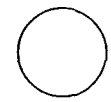

TO/FROM SPECIFIC FLOW CHART (FC)

STATEMENT OF A
REQUIRED ACTION

FIGURE 1 — FLOW CHART SYMBOLS

a) Paper container for the MCAU/AMMU, MSMU AND CRDU PCBs.

b) Anti-static container for all other PCBs.

c) Plastic bags for EKTs, MKSUs, etc.

04.02 NEVER WRITE ON THE APPARATUS ITSELF! Describe the nature of the defect on an information tag, and attach the tag to the front of the unit with string (not wire) so that the tag can remain attached during the testing and repair process.

04.03 If different and/or additional faults are created in the system by substituting a PCB, tag and return the substitute PCB as a defective unit.

05 FAULT IDENTIFICATION AND ELIMINATION PROCEDURES

05.01 The MCAU/AMMU PCB may contain a "soft" fault due to static electricity. If the MCAU/ AMMU is found defective during the fault finding procedures, attempt to clear a soft fault prior to returning the PCB for repair. The correct procedure for this is to reinstall the MCAU/AMMU, perform the initialization procedure and then reprogram the system as necessary to test for the fault. If the fault returns after reinstalling and performing the initialization procedure, tag the defective MCAU/AMMU and return for repair.

NOTE:
1. *The CRDU PCB is not considered separately from its host PCBs in any flow chart except the Automatic Dialing Fault flow chart.*
2. *If a CRDU is equipped, remove the CRDU when substituting a host PCB (MCBU or MDSU) and reinsert the same host PCB into the MKSU. If the fault is cleared, replace the defective CRDU.*

TABLE A

STATION CABLE CONTINUITY CHECK USING VOLTMETER

NOTE:
Perform the following at the locations indicated:
1. *Modular block: Check all station cables.*
2. *MDF: Check cable from MSTU to MDF.*

1) Disconnect the EKT.

2) Using a DC voltmeter, measure between the wires of the two pairs to verify the presence of the following readings:

FROM			TO			VOLTAGE*
Pair	Wire	Color	Pair	Wire	Color	
1	T	Green	2	T	Black	24
1	R	Red	2	T	Black	24
1	T	Green	2	R	Yellow	24
1	R	Red	2	R	Yellow	24
1	T	Green	1	R	Red	0
2	T	Black	2	R	Yellow	0

3) An improper reading indicates an open, crossed or shorted wire.

4) For the MDF-to-EKT cable, a more precise check is made using an ohmeter per Table B.

**Nominal voltage—within the power supply limits of 23.2∿28.2 VDC while under AC power.*

TABLE B

STATION CABLE CONTINUITY CHECK USING OHMETER

1) Disconnect the EKT at the wall.

2) At the MDF, remove the bridging clips.

3) Using an ohmeter, measure the resistance between all combinations of the four wires at the modular block. All measurements should exceed 1 MOhm.

4) At the MDF, place shorting jumper wires between the T and R of pair #1 (green-red) and the T and R of pair #2 (black-yellow).

5) At the modular block, measure the resistance between all wire combinations. The proper readings are as follows:

FROM			TO			RESISTANCE
Pair	Wire	Color	Pair	Wire	Color	
1	T	Green	2	T	Black	1 MOhm
1	R	Red	2	T	Black	1 MOhm
1	T	Green	2	R	Yellow	1 MOhm
1	R	Red	2	R	Yellow	1 MOhm
1	T	Green	1	R	Red	55 Ohms*
2	T	Black	2	R	Yellow	55 Ohms*

**NOTE:*
The green-red and black-yellow measurements should be within 10% of each other.

TABLE C
STRATA XII & XX POWER DISTRIBUTION

	MPRU				
Input	Power Switch	Inter. Breaker	Dist. Breaker	Voltage	PCB Served
+24V From EPSA 104	SW1	F1 (24V#1)	F3 (EKT #1)	24V#1	MSTU #1 (SXII) #1, 2 (SXX)
			F4 (EKT #2)	24V#1	MSTU #2 (SXII) #3, 4 (SXX)
		F2 (24V#2)	F5 (EKT #3)	24V#1	MSTU #3 (SXII) #5, 6 (SXX)
			F6 (EKT #4)	24V#1	MSTU #4 (SXII) #7 (SXX)
			F7 (MKSU)	24V#2	MCOU MDSU MINU MSMU
				+12	MCOU MXPU MOPU MSTU MCAU MSMU MCBU MDSU MINU
				V1	MINU MXPU MSTU
				+5	MCOU MSTU MOPU MSMU MCAU MCBU MDSU MINU

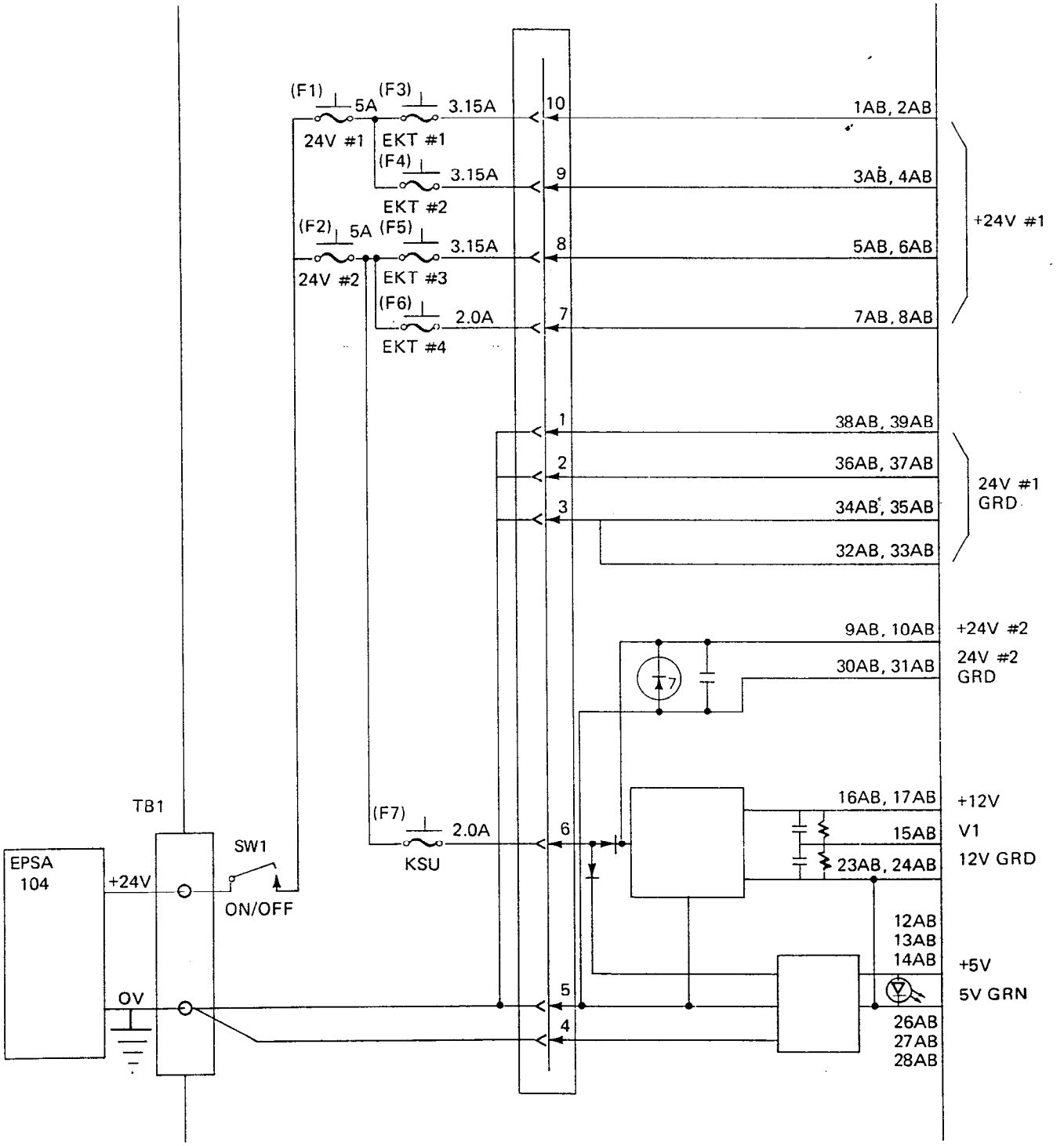

FIGURE 2—SIMPLIFIED MPRU SCHEMATIC

TABLE D
STRATA XII & XX CROSSPOINT MATRIX LOCATION

	STRATA XII & XX PRIMARY MATRIX*		STRATA XX EXPANSION
Station Number	ICM 1∿4 Group Page BGM, DSS	CO 1∿12	CO 13∿21 ICM 5, 6
10∿17	MSTU #1	MXPU #1	MXPU #2
18∿25	MSTU #2		
26∿33	MSTU #3	MXPU #2 (SXII) MXPU #3 (SXX)	MXPU #4
34∿41	MSTU #4		
42∿49	MSTU #5	MXPU #5	MXPU #6
50∿57	MSTU #6		
58∿65	MSTU #7	MXPU #7	MXPU #8

**IMPORTANT:*
In its power-up sequence, the STRATA software verifies that the primary matrix (MXPU) exists for each MSTU. If an MSTU is installed without an accompanying MXPU, all stations in the system will be inoperative until the mismatch is corrected and the power switch is cycled OFF and ON.

TABLE E—CRDU POSITIONS

NOTE:
The quantity of Automatic Dialing numbers (STRATA XII & XX) provided the system and stations by the available options are listed in this table. A CRDU is equipped on each PCB mentioned and the respective address codes are indicated in parenthesis.

	None	MCBU #1	MDSU	MCBU #1 MDSU	MCBU #2	MCBU #1 MCBU #2	MCBU #1 MCBU #2 MDSU
System List	24 (60∿83)	40 (60∿99)	24 (60∿83)	40 (60∿99)	24 (60∿83)	40 (60∿99)	40 (60∿99)
Stations 10∿46*	—	20 (10∿29)	20 (30∿49)	40 (10∿49)	—	20 (10∿29)	40 (10∿49)
Stations 47∿65	—	—	—	—	40 (10∿49)	40 (10∿49)	40 (10∿49)

**Stations 10∿41 for STRATA XII.*

CHART NO. 1
FAULT CLASSIFICATION

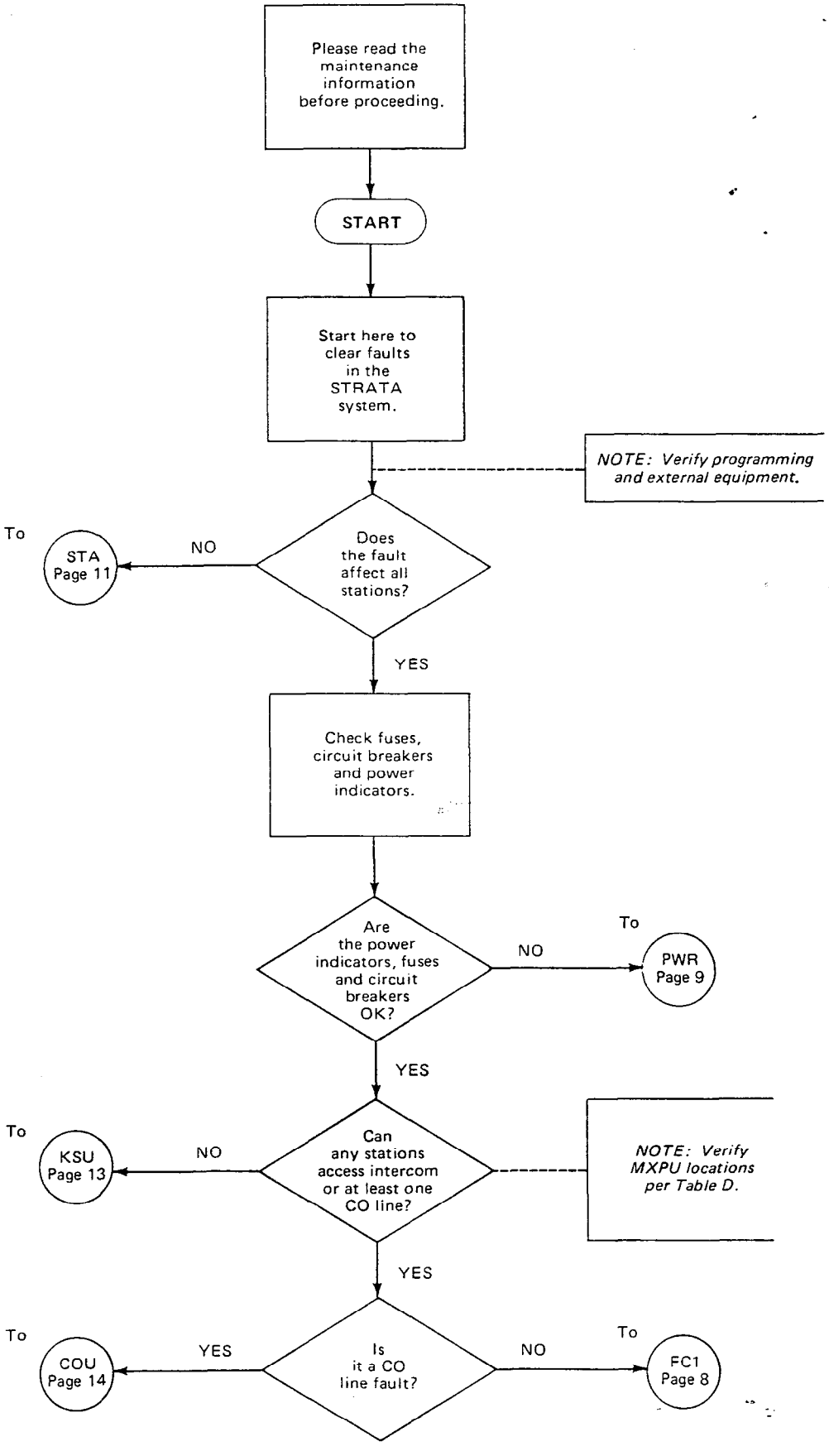

CHART NO. 1
FAULT CLASSIFICATION (cont'd)

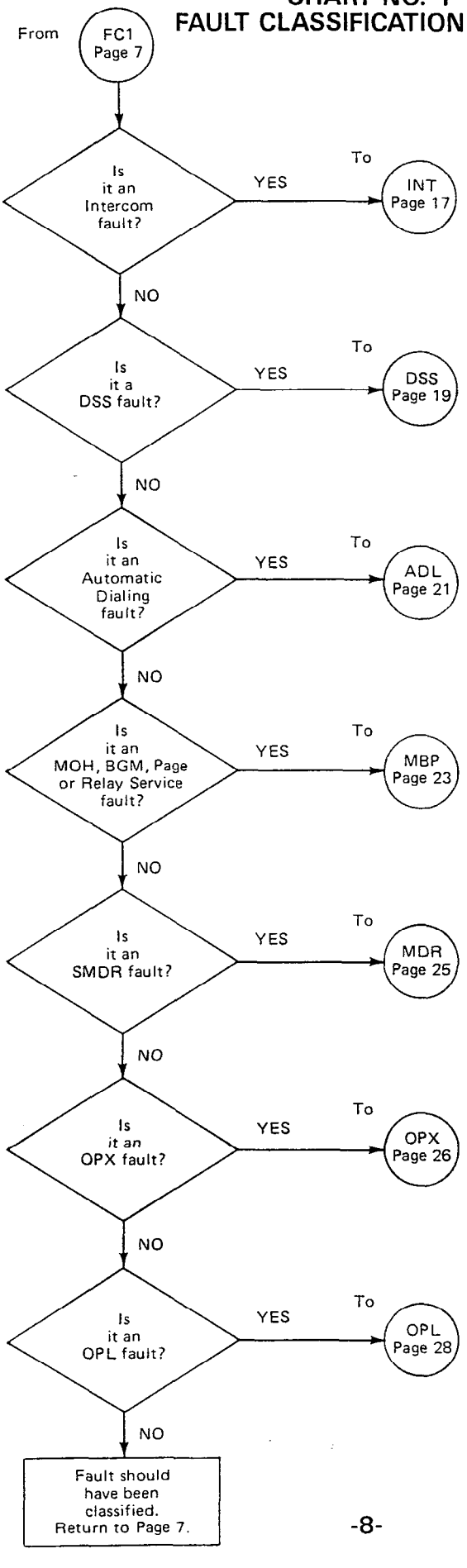

CHART NO. 2
POWER FAULTS

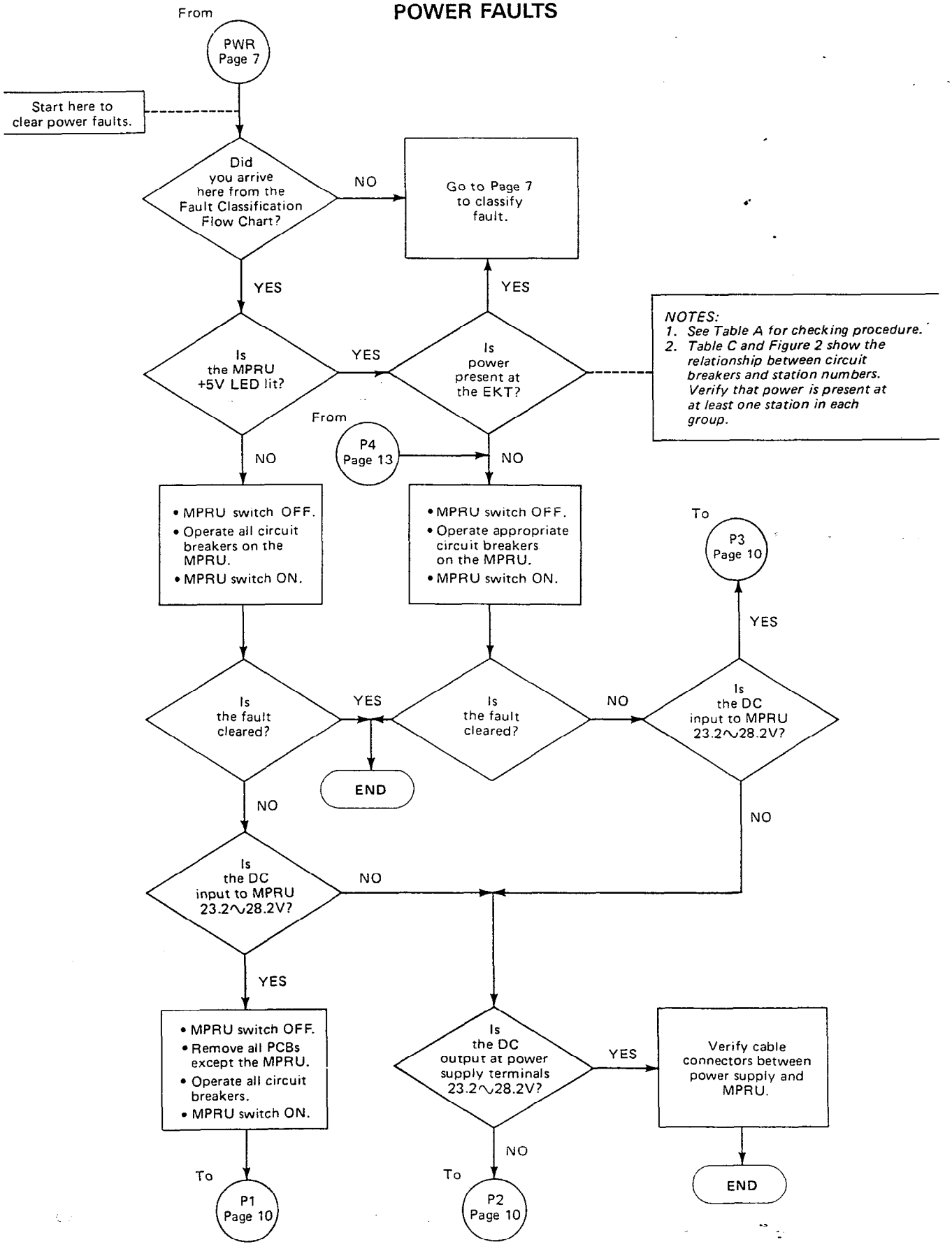

CHART NO. 2
POWER FAULTS (cont'd)

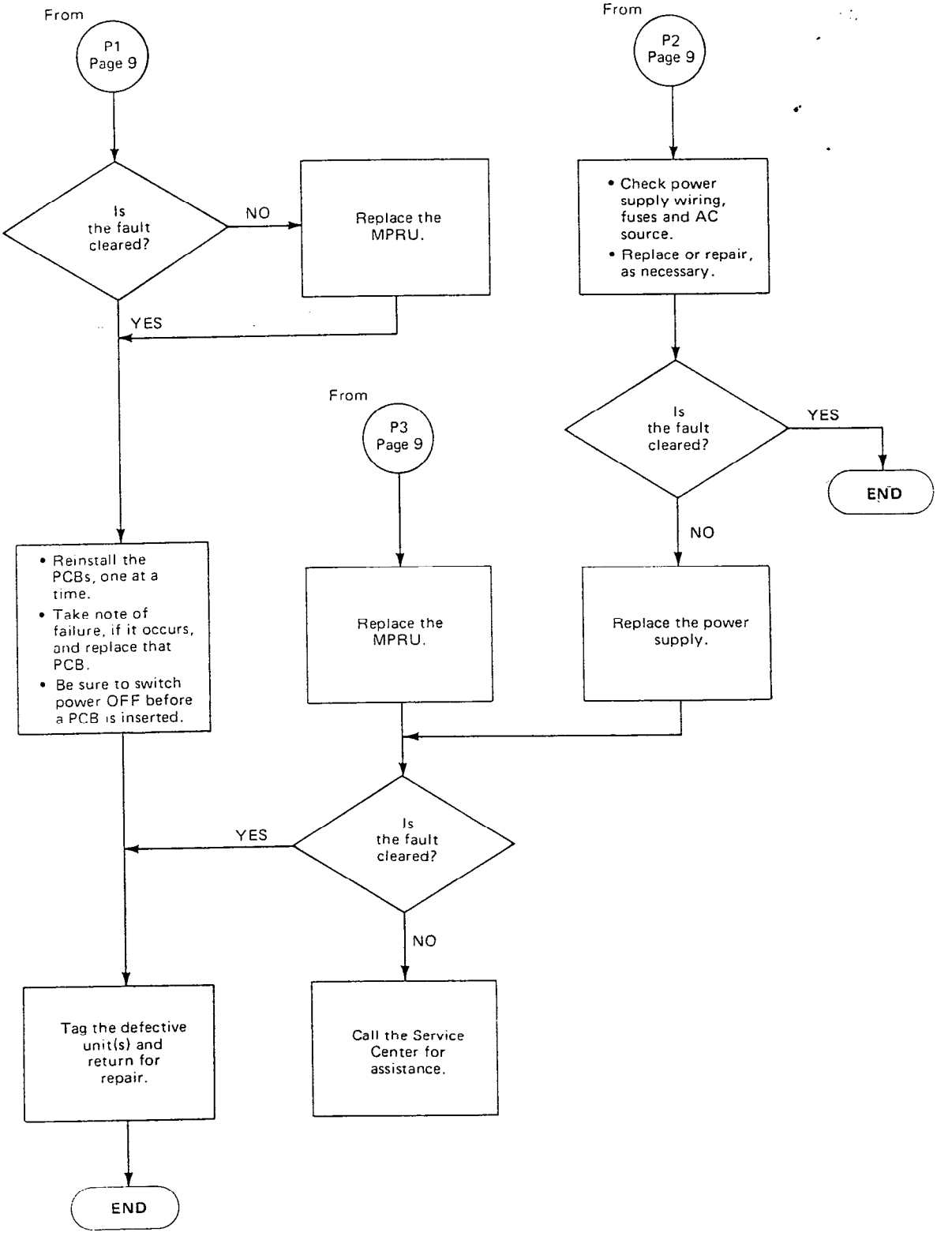

CHART NO. 3
STATION FAULTS

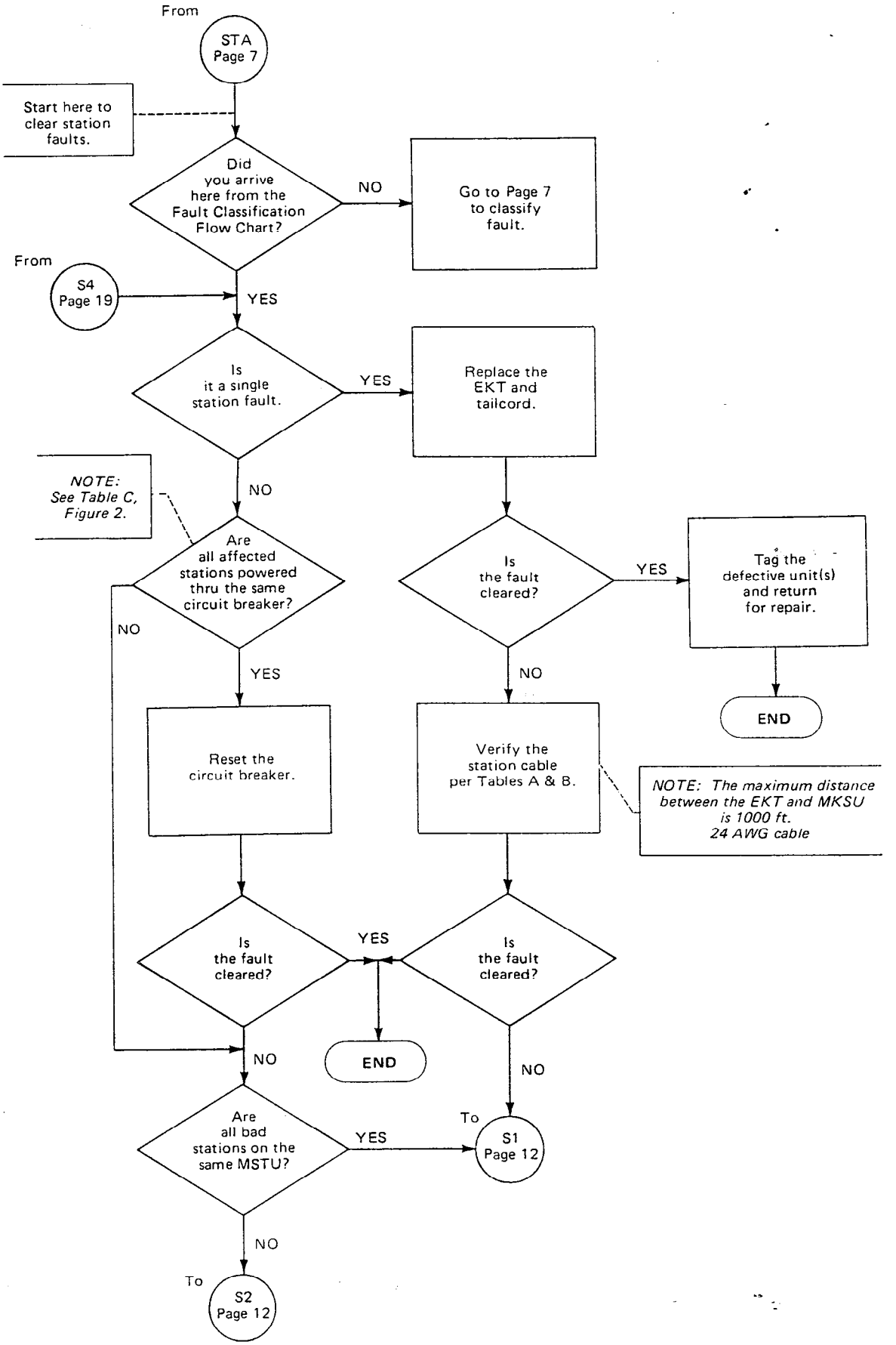

CHART NO. 3
STATION FAULTS (cont'd)

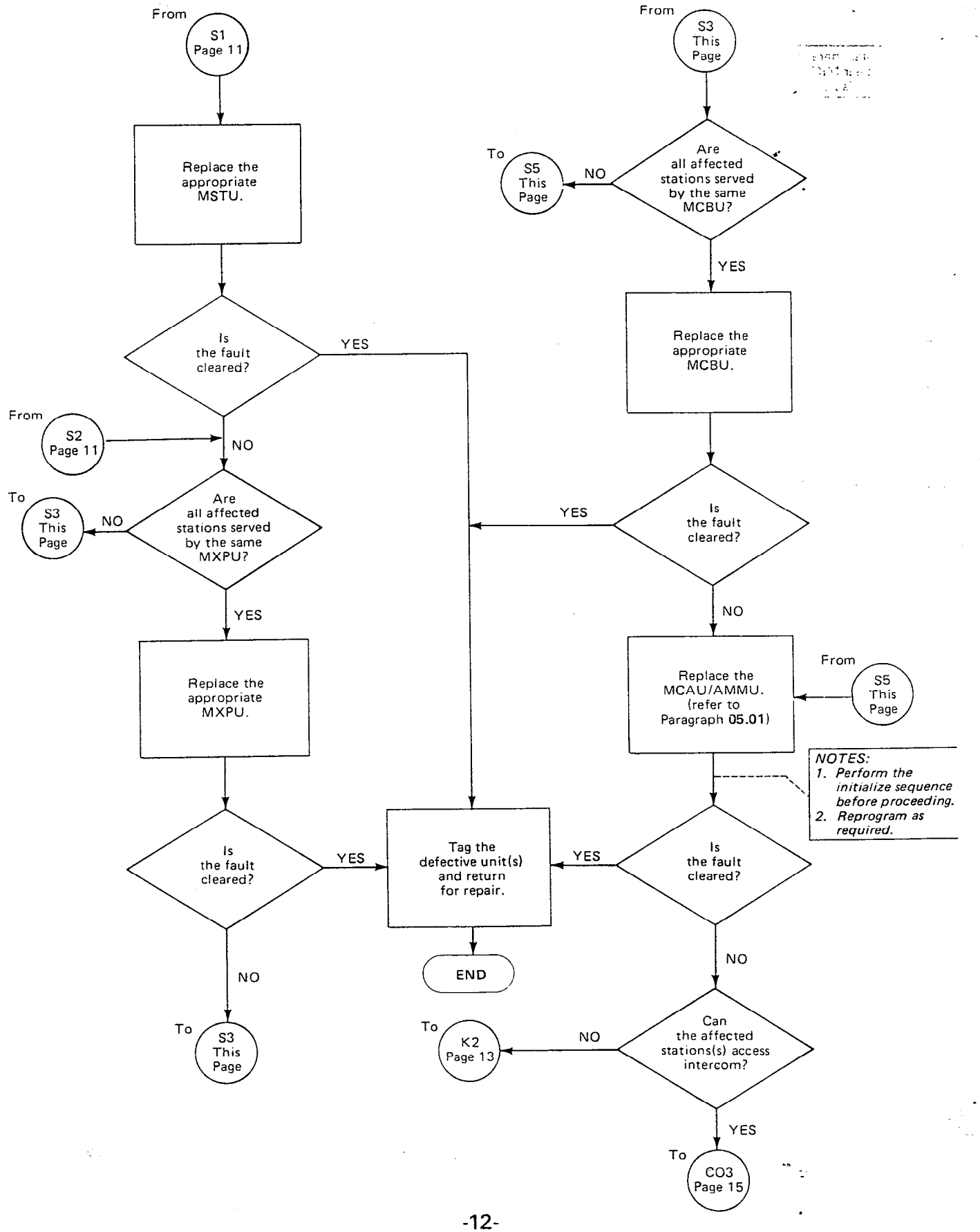

CHART NO. 4
MKSU FAULTS

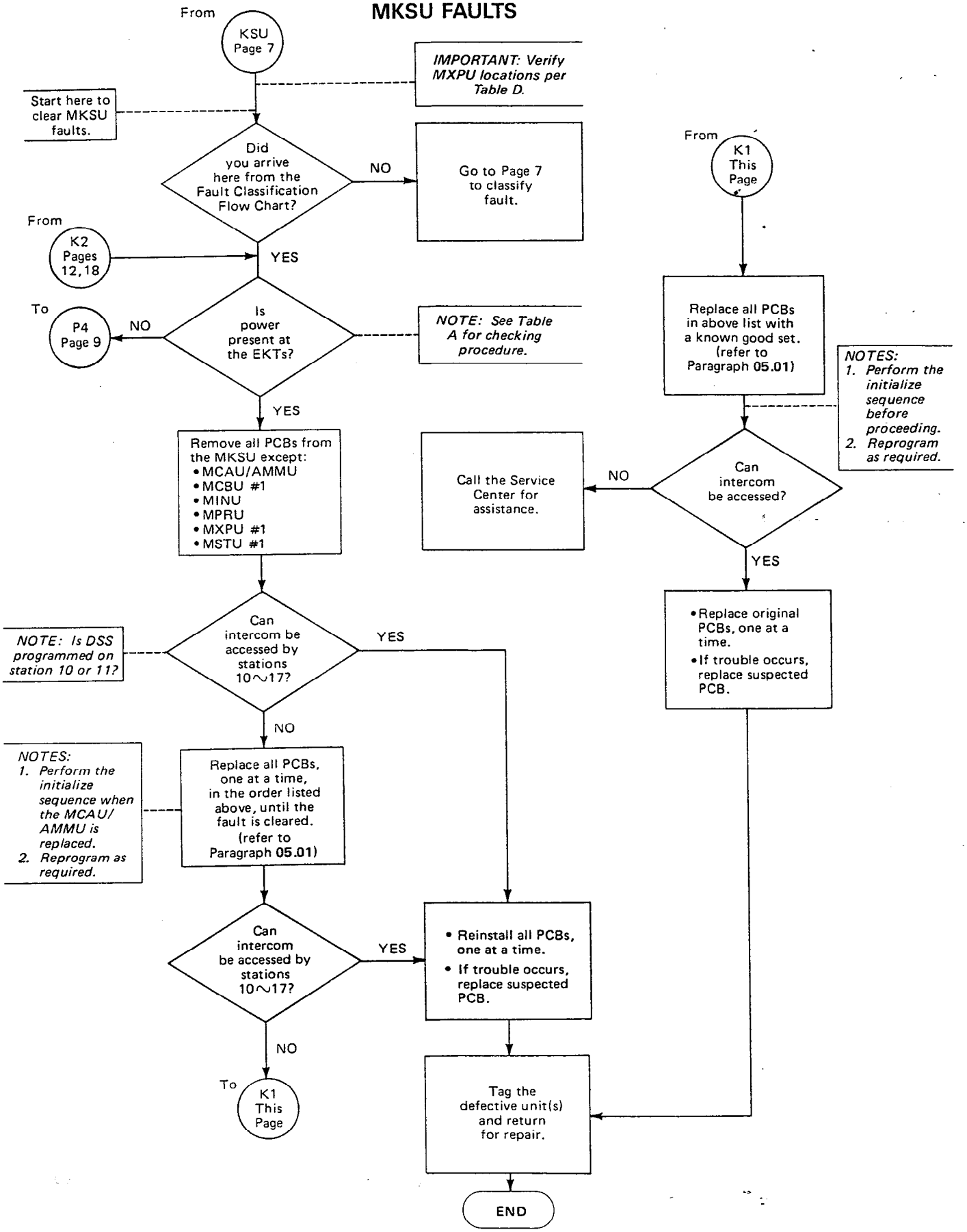

CHART NO. 5
CO LINE FAULTS

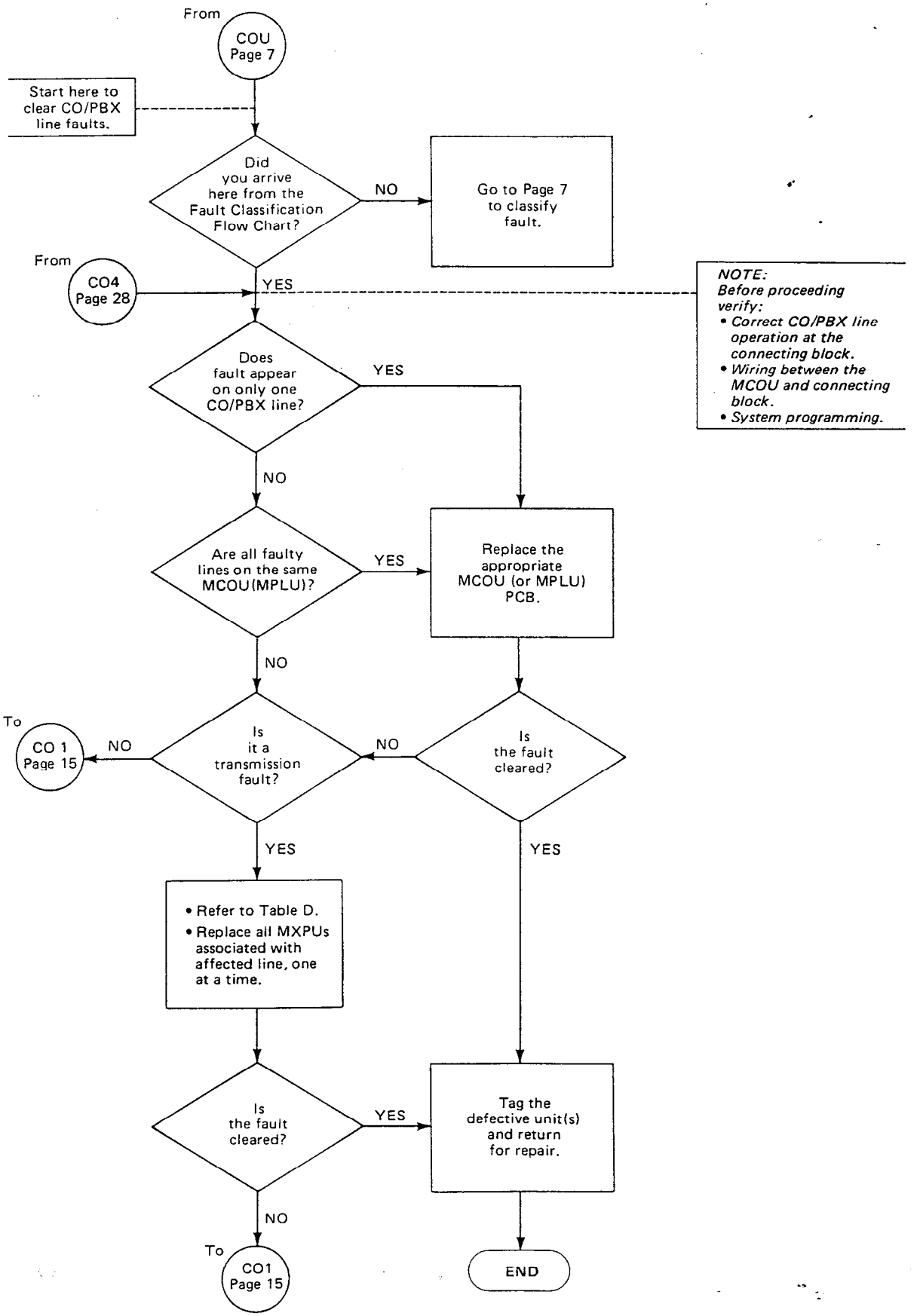

CHART NO. 5
CO LINE FAULTS (cont'd)

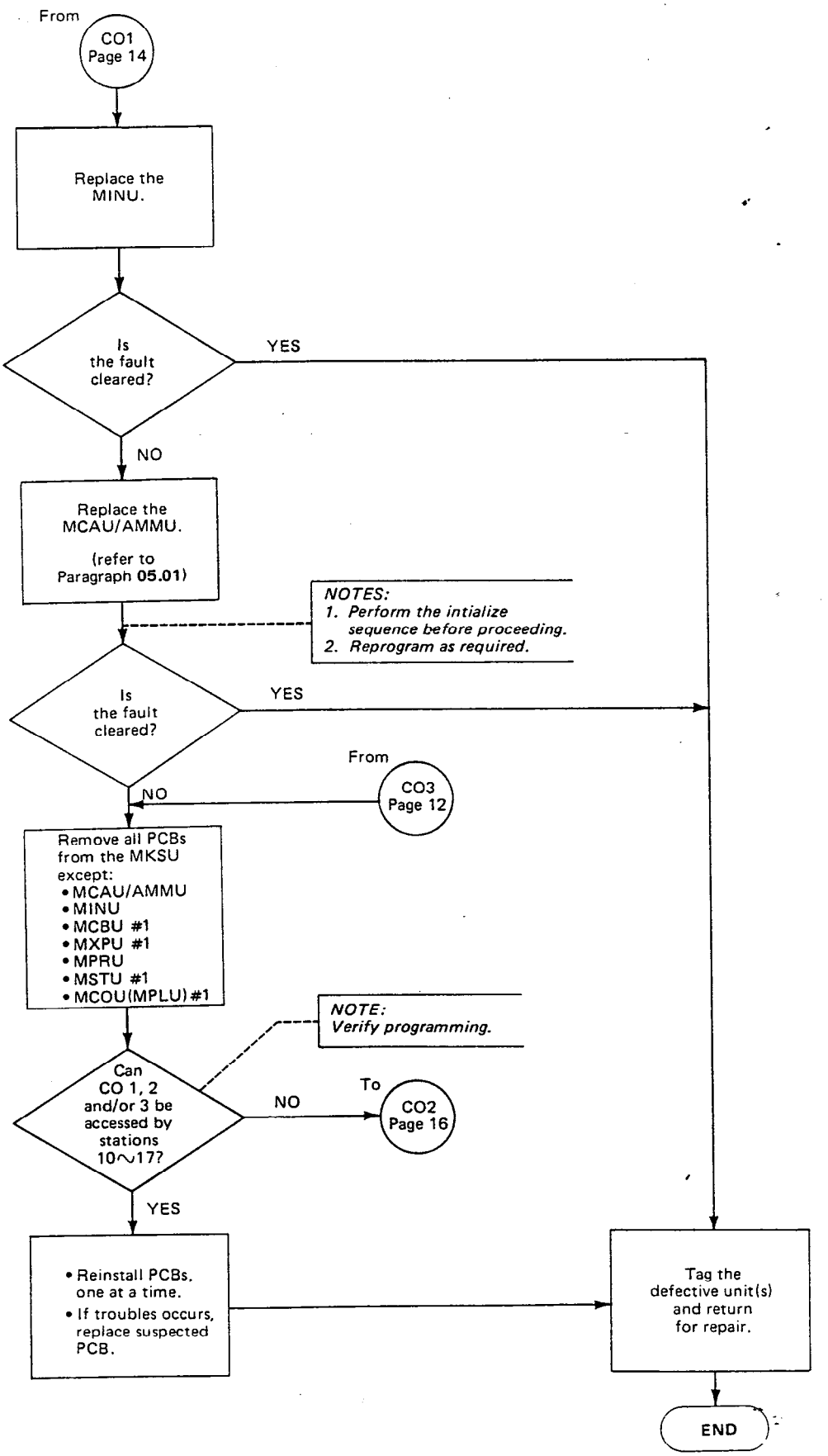

CHART NO. 5
CO LINE FAULTS (cont'd)

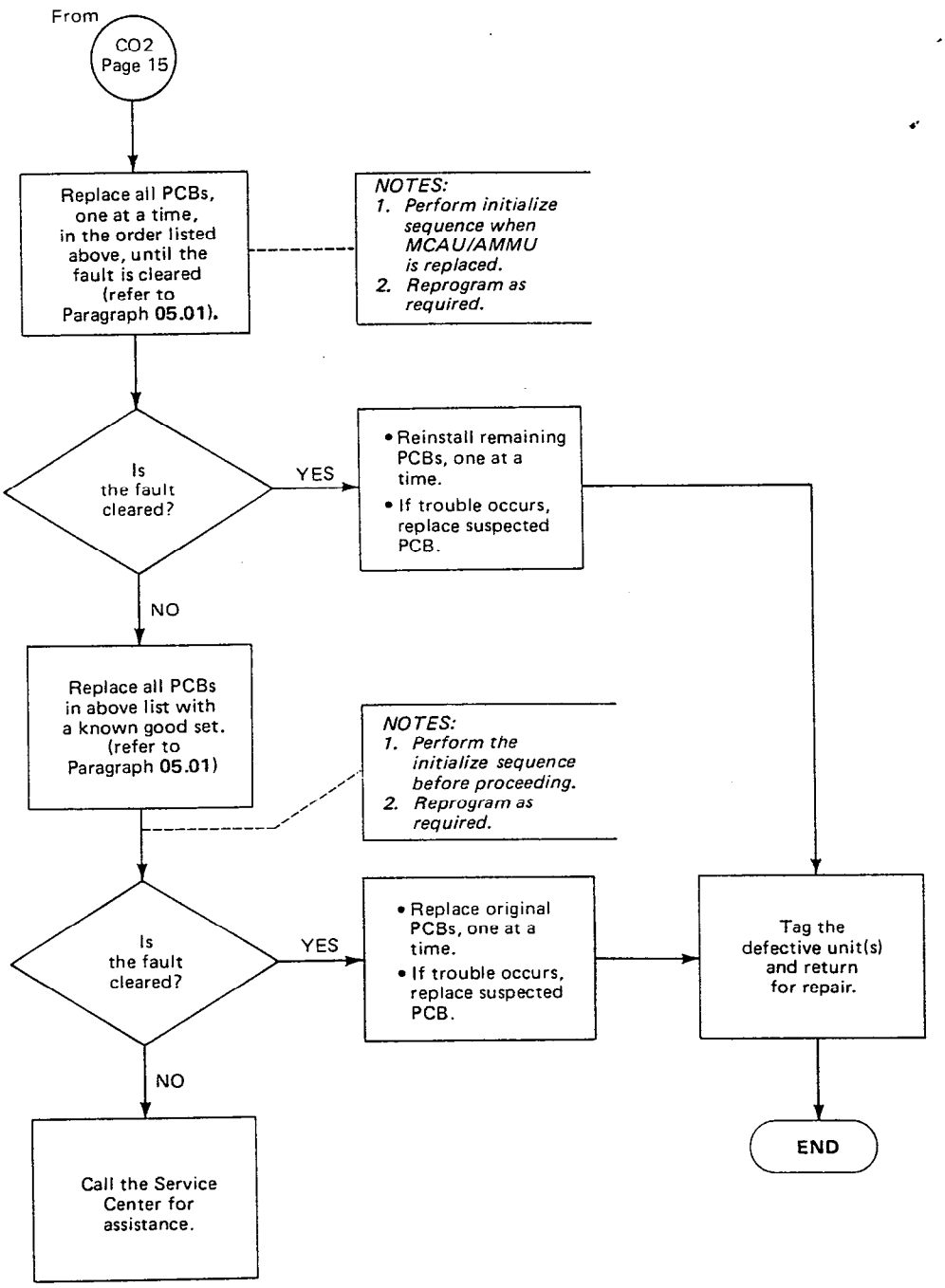

CHART NO. 6
INTERCOM FAULTS

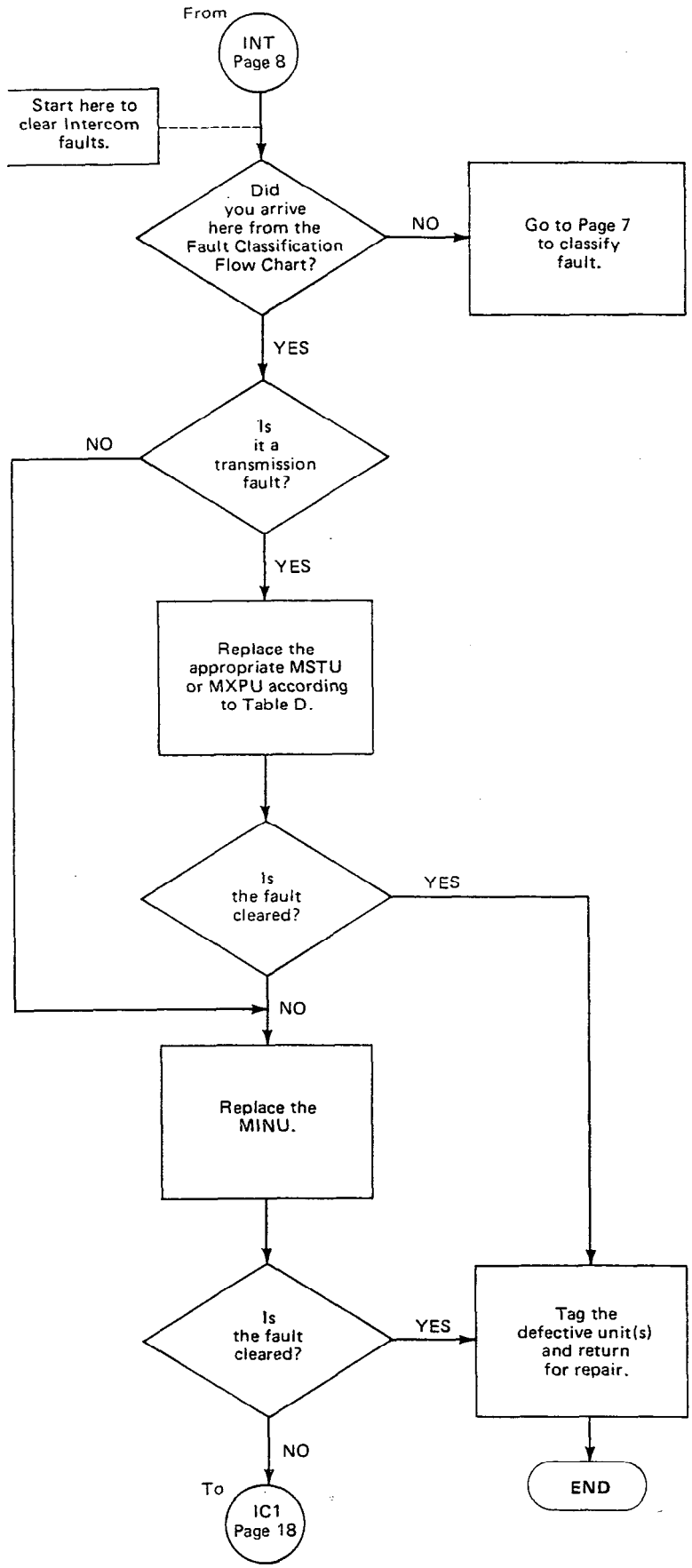

CHART NO. 6
INTERCOM FAULTS (cont'd)

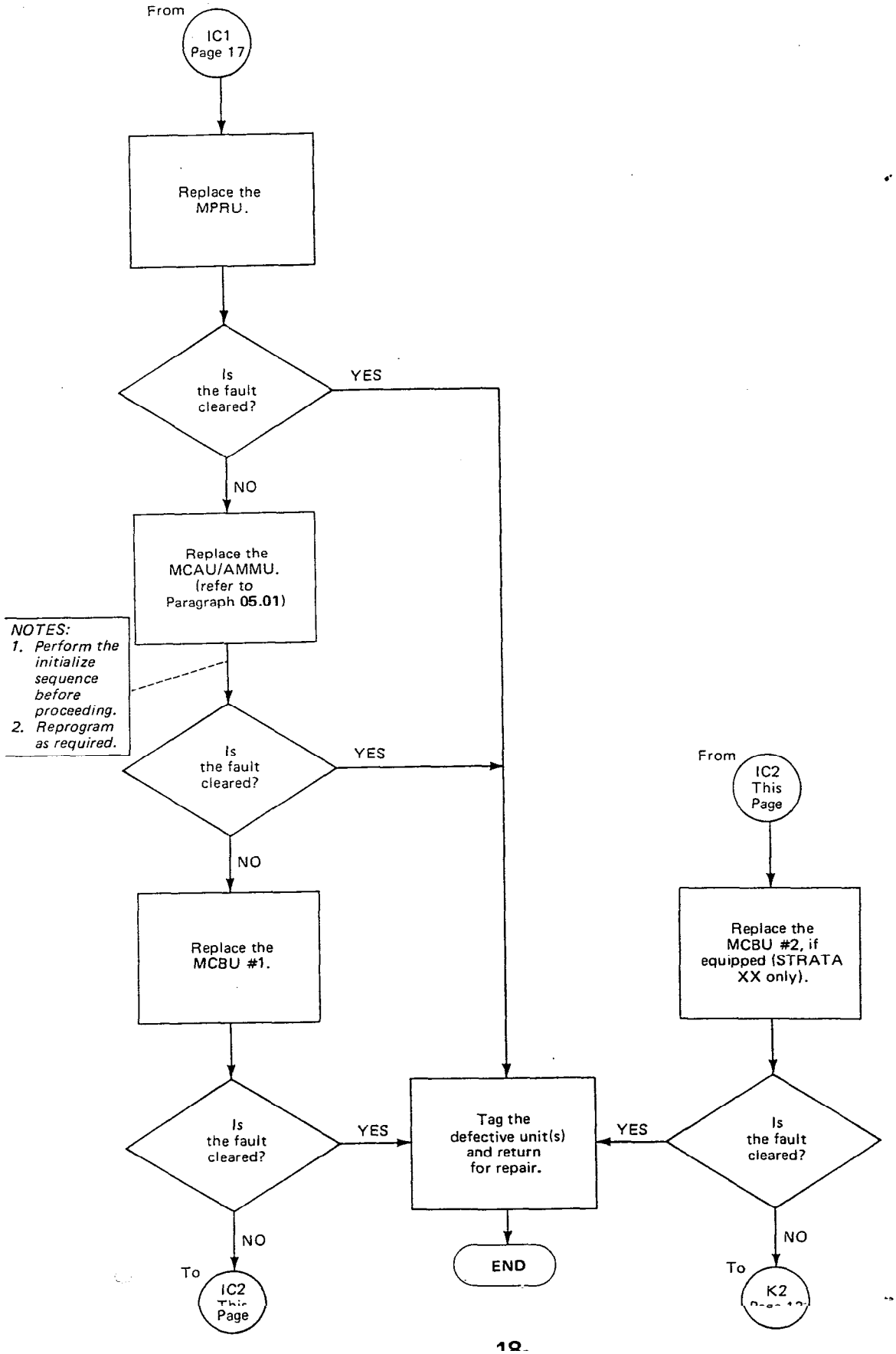

CHART NO. 7
DSS FAULTS

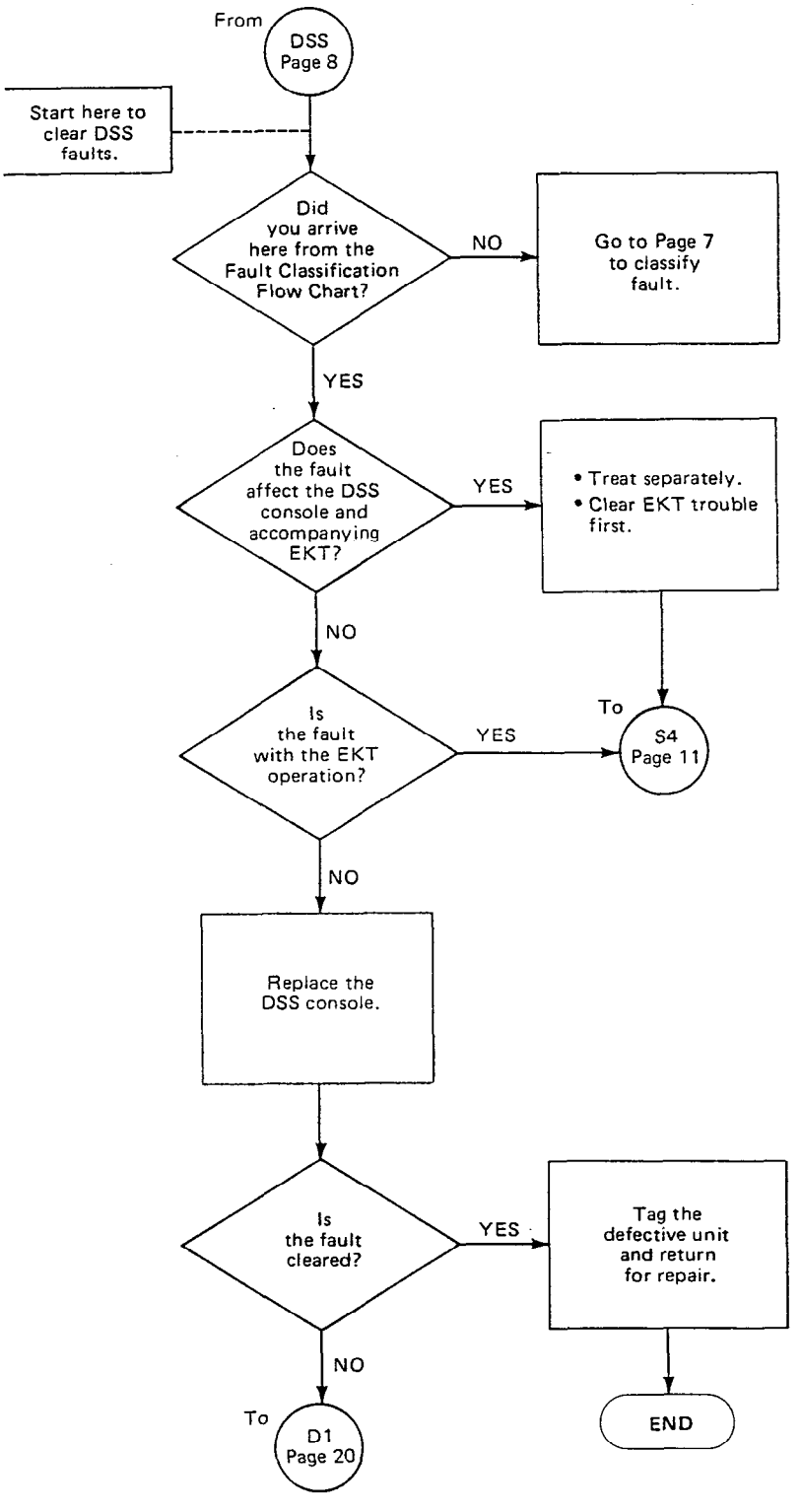

CHART NO. 7
DSS FAULTS (cont'd)

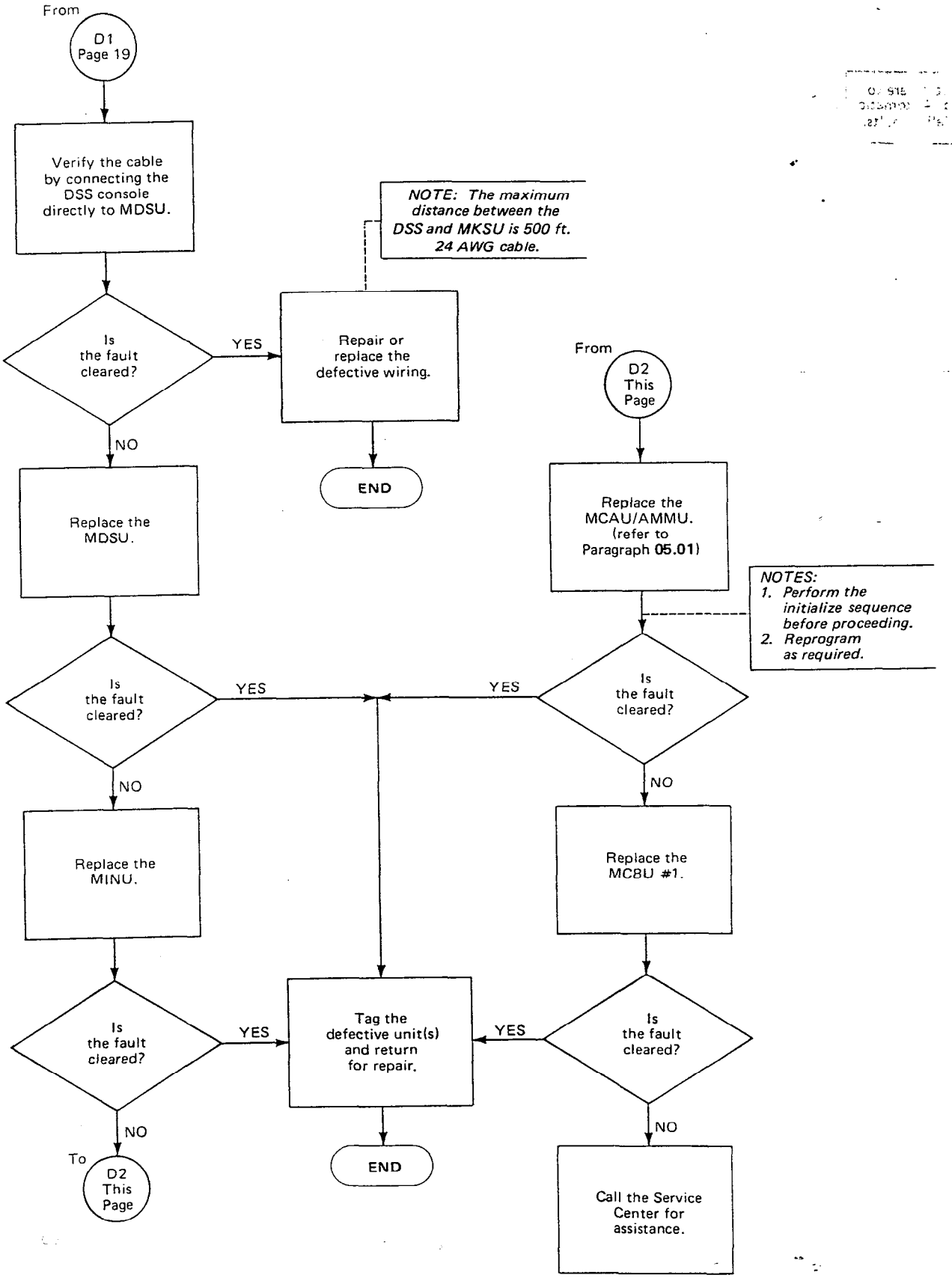

CHART NO. 8
AUTOMATIC DIALING FAULTS

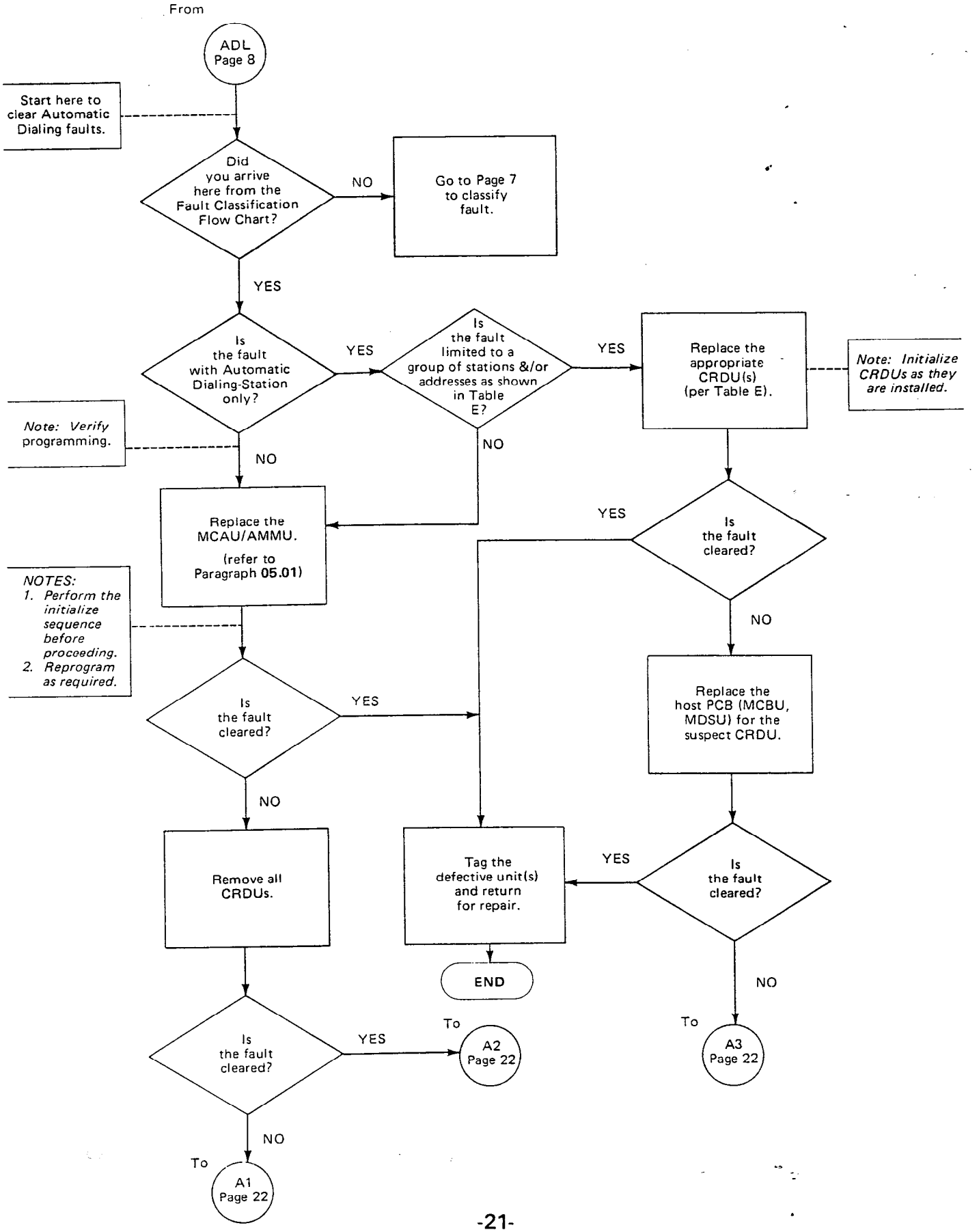

CHART NO. 8
AUTOMATIC DIALING FAULTS (cont'd)

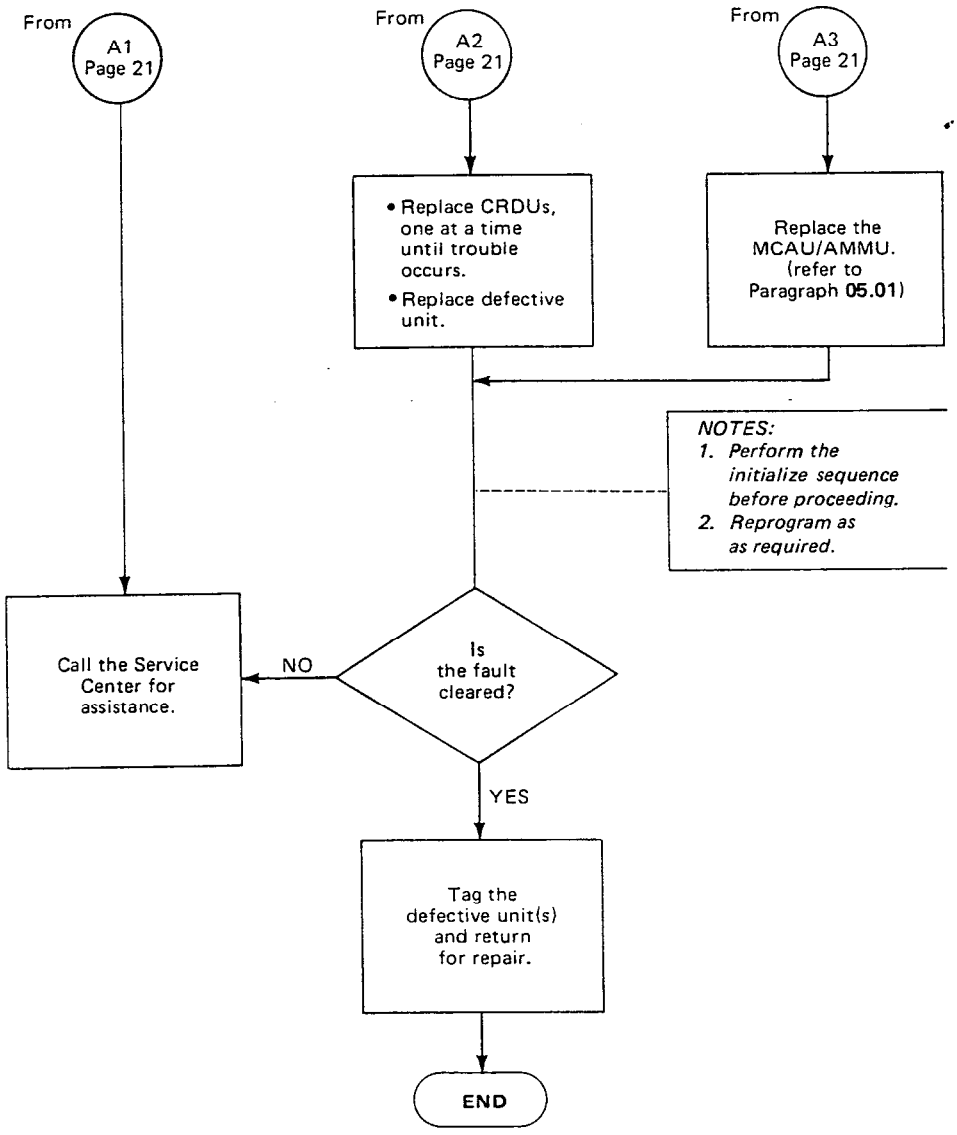

CHART NO. 9
MOH, BGM, PAGE & RELAY SERVICE FAULTS

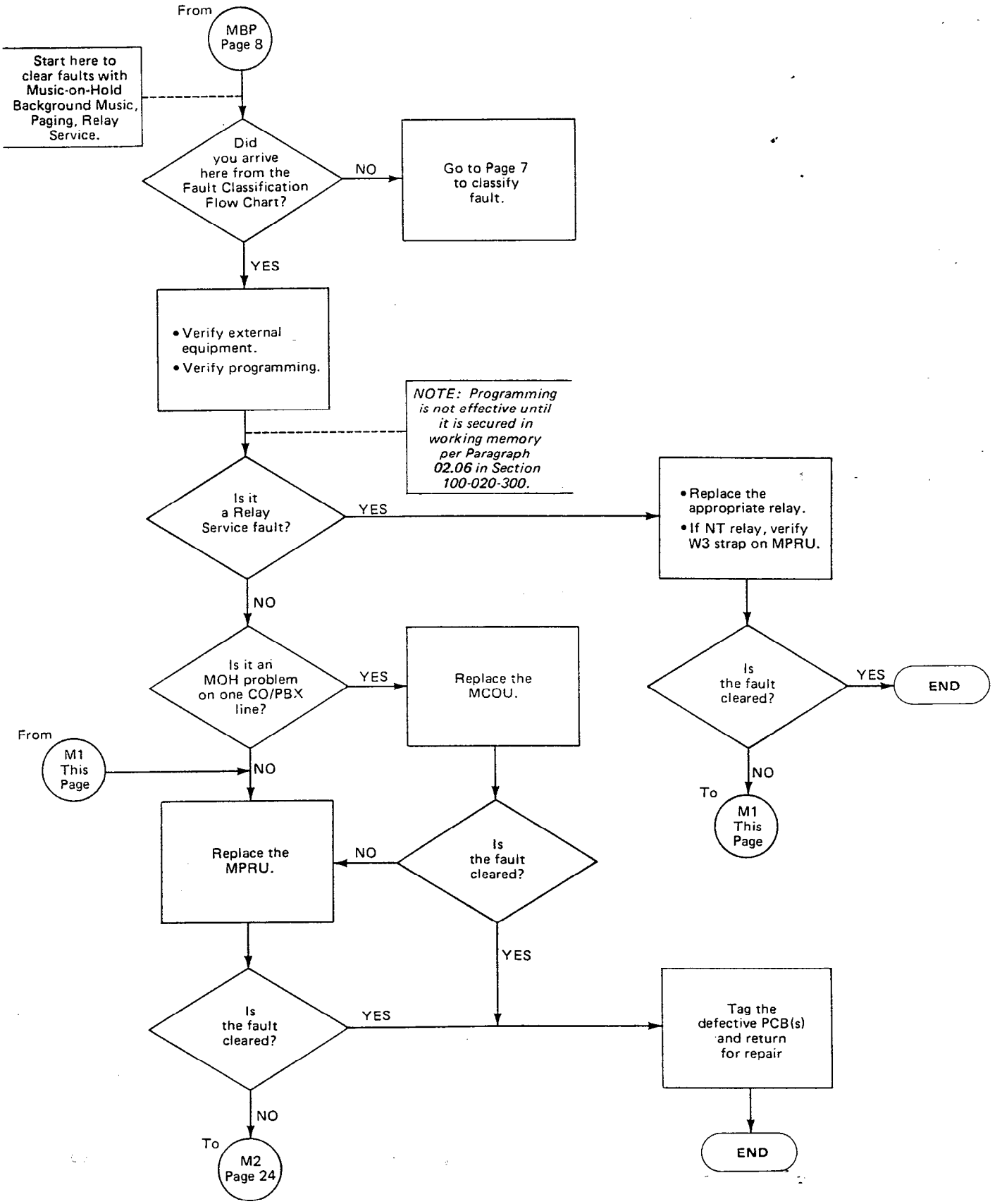

CHART NO. 9
MOH, BGM, PAGE & RELAY SERVICE FAULTS (cont'd)

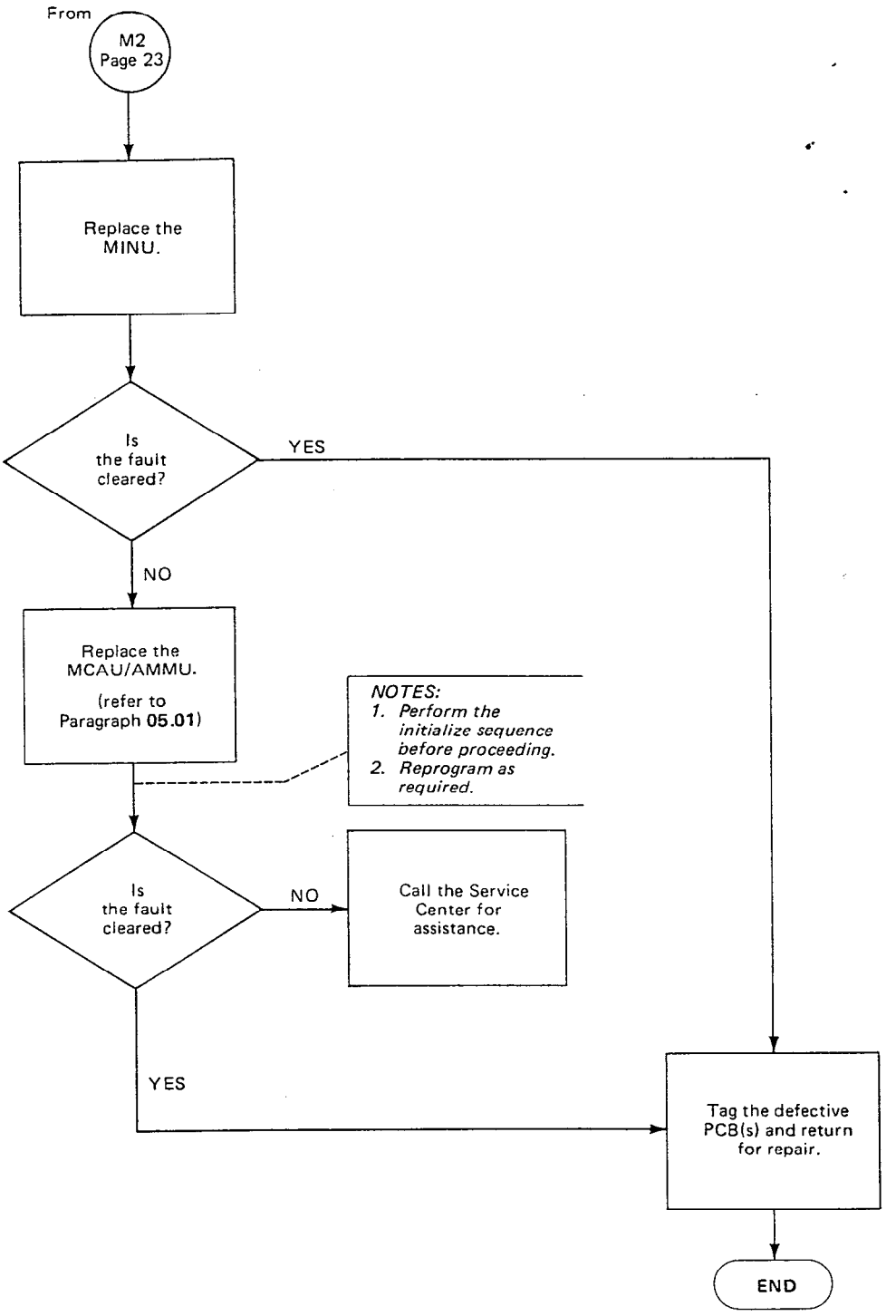

CHART NO. 10
SMDR FAULTS

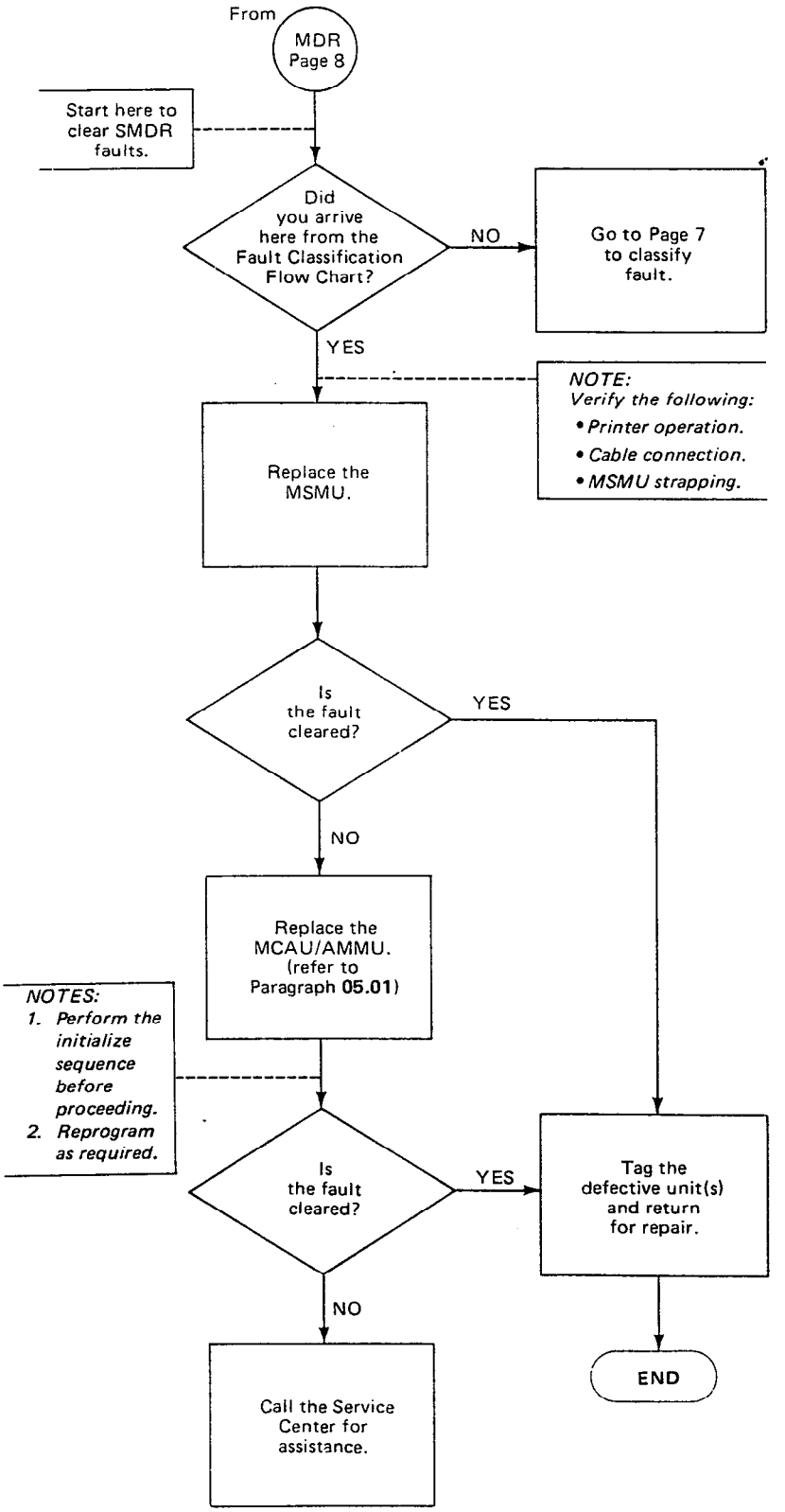

CHART NO. 11
OPX FAULTS

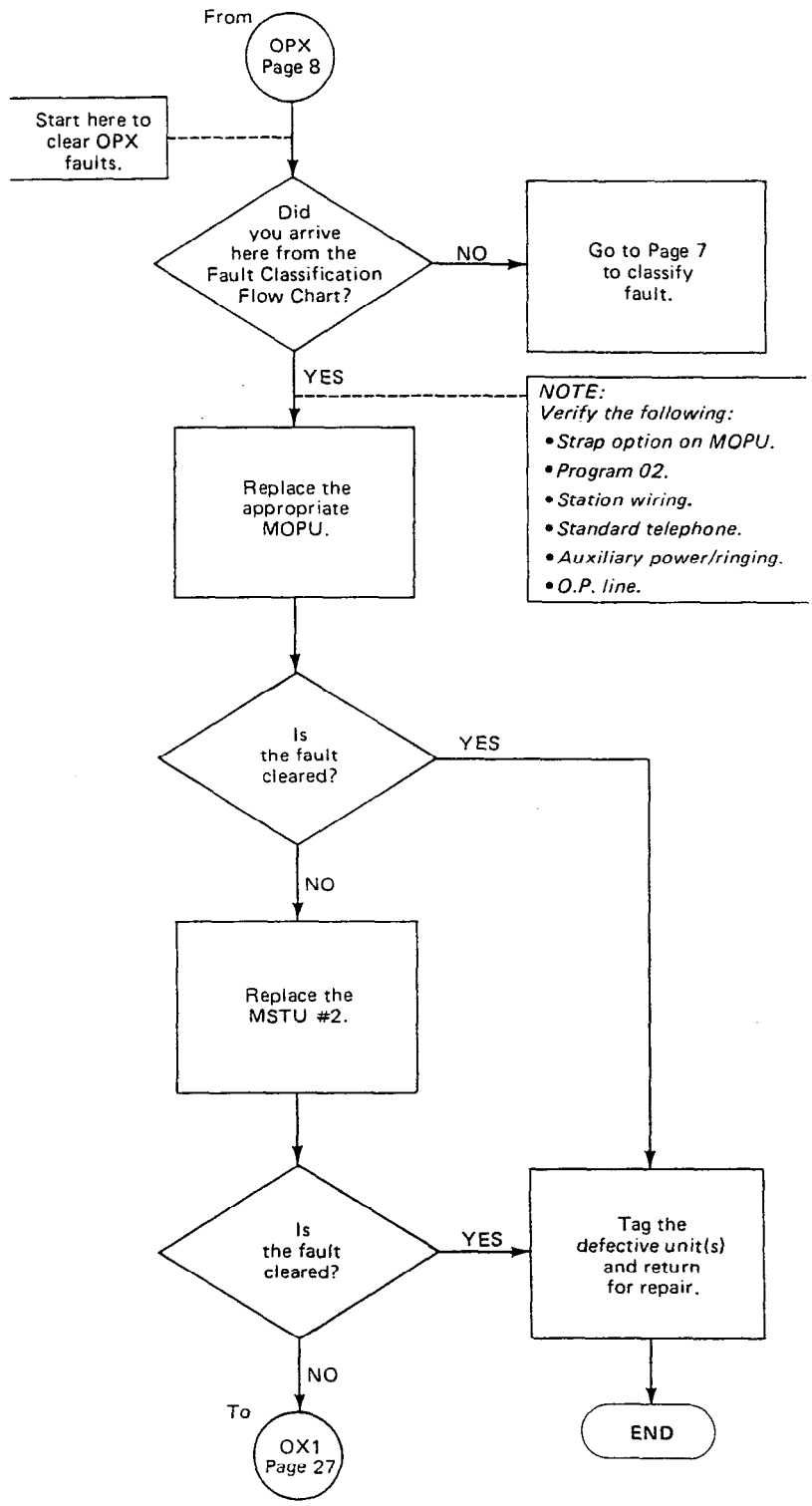

CHART NO. 11
OPX FAULTS (cont'd)

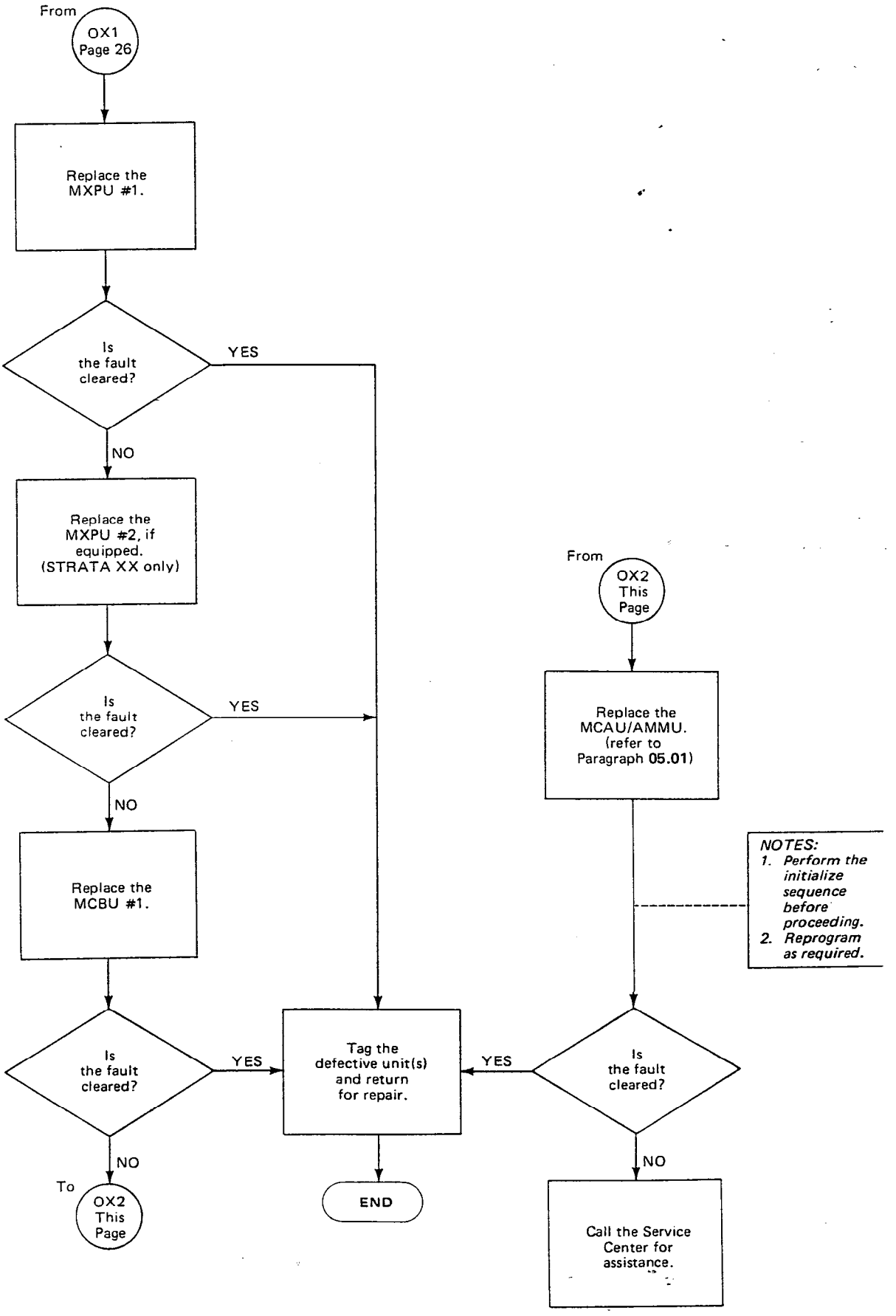

CHART NO. 12
OPL FAULTS

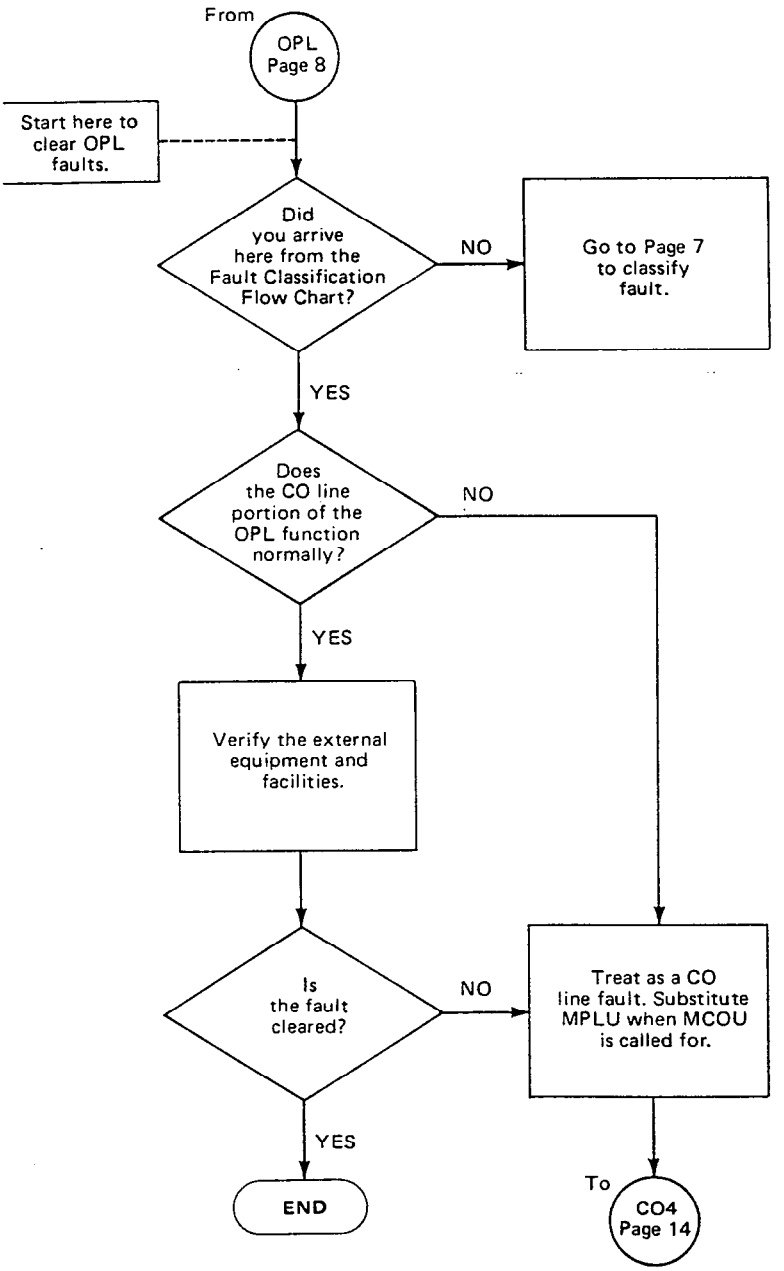

TB 020-8401
April 1, 1984

FCC REGISTRATION INFORMATION

The STRATA XII & XX systems are FCC registered for connection to the public telephone network and off premise station (OPS) lines. The detailed information is:

General

Registration Number	BF287N-11115-KF-E

Public Telephone Network

Ringer Equivalence	0.5B
Connector Type	RJ 25C
STRATA PCB Type	MCOU

Off Premise Station Line

Facility Interface Code	OL13C*
Service Code	9.0F
Connector Type	RJ 25C
STRATA PCB Type	MOPU

**NOTE:*
To be compatible with OL13C, the OPS interface (MOPU PCB) must be equipped with a -48V power supply.

TOSHIBA LECOM **Strata® XII & XX**

TECHNICAL BULLETIN

TB-020-8402
April 15, 1984

PROPER MSTU/MXPU INSTALLATION REQUIRED

In its power-up sequence, the ***Strata XII & XX*** software checks to verify that the primary matrix (MXPU) exists for each station interface (MSTU). If an MSTU is present without that matrix, *all stations will be inoperative.* To bring the system into operation it is necessary to:

- Power down
- Remove the excess MSTU or add the missing MXPU
- Power up

It is possible to add and remove MSTUs and MXPUs freely while the power is on; however, if the power is switched off and on while a mismatch is present, the system will not function.

The expanded matrix (MXPUs 2, 4, 6 & 8) in ***Strata XX*** is also checked during the power-up sequence. This expanded matrix is not required for the system to function, but CO lines 13∼21 and intercoms 5 & 6 will not function unless these PCBs are present during power-up. It is permissible, however, to have some stations with the expanded matrix and others without it. If a new MXPU is added to an existing system, its presence will not be recognized until the power is cycled **OFF/ON**.

Refer to the table below for the proper MXPU locations.

Strata XII & XX
CROSSPOINT MATRIX LOCATIONS

	Strata XII & XX		***Strata XX***
	Primary Matrix No.		**Expansion**
Station No.	ICM 1∼4 Group Page BGM, DSS	CO 1∼12	CO 13∼21 ICM 5, 6
10∼17	MSTU #1	MXPU #1	MXPU #2
18∼25	MSTU #2		
26∼33	MSTU #3	MXPU #2(***XII***)	MXPU #4
34∼41	MSTU #4	MXPU #3(***XX***)	
42∼49	MSTU #5	MXPU #5	MXPU #6
50∼57	MSTU #6		
58∼65	MSTU #7	MXPU #7	MXPU #8

Division of Toshiba America, Inc.
2441 Michelle Drive, Tustin, CA 92680 (714) 730-5000
111 Business Park Drive, Armonk, N.Y. 10504 (914) 273-1750